International Journal of Scientific Research

Indexed with International ISSN Directory, Paris

Volume 1 | Issue 2 | July 2012

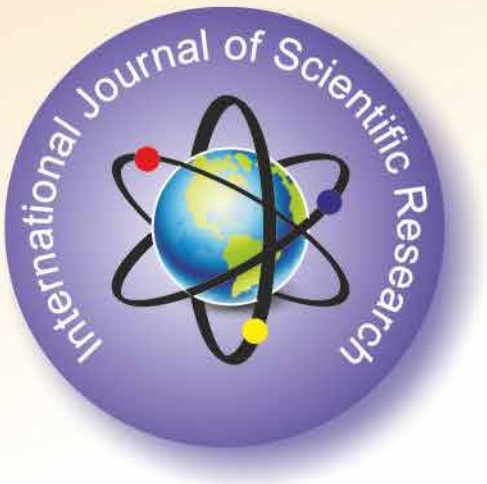

ISSN No. 2277 – 8179

A Multi-Subject Journal

ISSN No. 2277 – 8179

International Journal of Scientific Research

Journal for All Subjects

Advertisement Details

Position	B/W (Single Color)	Fore Color
Full Inside Cover	₹ 6250	₹ 12500
Full Page (Inside)	₹ 5000	-

Subscription Details

Period	Amount Payable
One Year (12 Issues)	₹ 3000
Two Year (24 issues)	₹ 5800
Three Year (36 issues)	₹ 8700
Five Year (60 issues)	₹ 14400

You can download the Advertisement / Subscription Form from website www.gra.in. You will require to print the form. Please fill the form completely and send it to the **Editor, International Journal of Scientific Research** along with the payment in the form of Demand Draft/Cheque at Par drawn in favour of **International Journal of Scientific Research** payable at Ahmedabad.

Editor-In-Chief

Khansa Memon
Editor, Sarah Publishing Academy

Editorial Advisory Board

Dr. Ashok S. Pawar
Associate Professor, Dept. of Economic
Dr. Babaasaheb Ambedkar
Marathwada.University, Aurngabad

Dr.(Prof) Vijay Kumar Soni
Principal,
Jai Meenesh College, Phagi,
Jaipur, Rajasthan

Dr. A.R. Saravankumar
Assistant Professor in Education
DDE, Alagappa University,
Tamilnadu

Dr.R.Ramachandran
Commerce Dde
Annamalai University
Tamilnadu India

Dr. R Ganpathy
Assistant Professor in Commerce
Directorate of Distance Education
Alagappa University Karaikudi.

Dr. Amit Bandyopadhyay
Assistant Professor
Department of Physiology
University of Calcutta

Dr. V. Kumaravel,
Professor and Head
Vivekanandha Buss. School for Women
Tiruchengode, Namakkal Dist

Dr. K. Prabhakar,
Professor,
Department of Manag. Studies,
Velammal Engg College, Chennai

Dr. Sunita J. Rathod
Maharashtra Education
Service Group-B
DIET Dist. Jalna

1. Thoughts, language vision and example in published research paper are entirely of author of research paper. It is not necessary that both editor and editorial board are satisfied by the research paper. The responsibility of the matter of research paper/article is entirely of author.
2. Editing of the **International Journal of Scientific Research** is processed without any remittance. The selection and publication is done after recommendations of atleast two subject expert referees.
3. In any condition if any National/International University denies accepting the research paper published in IJSR then it is not the responsibility of Editor, Publisher and Management.
4. Only the first author is entitle to receive the copies of all co-authors
5. Before re-use of published research paper in any manner, it is compulsory to take written permission from the Editor-IJSR, unless it will be assumed as disobedience of copyright rules.
5. All the legal undertaking related to **International Journal of Scientific Research** is subject to Ahmedabad Jurisdiction.
7. The research journal will be send by normal post. If the journal is not received by the author of research papers then it will not be the responsibility of the Editor and publisher. The amount for registered post should be borne by author of the research paper in case of second copy of the journal.

Editor,
INTERNATIONAL JOURNAL OF SCIENTIFIC RESEARCH
3, SUHANA, Nr. Rubi Apartment, B/H NID, Rajnagar Road,
Paldi – 380007. Ahmedabad-Gujarat. (INDIA)
Contact: +91 98247 02127, +91 88660 03636
Www.theglobaljournals.com | ijsr@theglobaljournals.com

INDEX

Sr. No.	Title	Author	Subject	Page No.
1	Ionic composition of a freshwater lake and its implications on aquaculture	Dr. Shankar P. Hosmani	Biotechnology	1-2
2	Growth and Performance of Mutual Fund Industry in India	Dr. M. K. Maru	Commerce	3-4
3	Waste Management: A New Paradigm of Contemporary Business	Dr. Vipul Chalotra	Commerce	5-6
4	Rural Financial Services in J&K (A study in the field of financial services sector development)	Tarsem lal	Commerce	7-8
5	Banyan, the National Tree of India	Dr. J.K. Sehgal	Commerce	9-10
6	Impact of Online Marketing on Customers with Special Reference to Coimbatore City	Dr. R. Ganapathi	Commerce	11-15
7	Customers' Attitude towards Housing Loan With Reference to Commercial and Rural Banks	Dr. R. Ganapathi, Mrs. B. VIDYA	Commerce	16-23
8	Consumer Behaviour towards Broiler Chicken Retail Stores With Reference to Madurai City	P. Easwaran, J. Gnanadevan, Dr. R. Ganapathi	Commerce	24-30
9	Data Security and Protection in Cloud Computing	Shameena Begum, V. Ratna Vasuki, K.V.V.Srinivas	Computer Science	31-34
10	Foreign Direct Investment in India – An Explanatory Study	Dr. K.Madhu Babu	Economics	35-38
11	Growth - Saving Causality in India: A Cointegration Analysis	Dr. Shradha H. Budhedeo	Economics	39-42
12	Constitutional perspectives on Labour Wages in India	Dr. Shankar Ambhore, Dr. Dilip Arjune, Manish Parshuram Pawar, Dr. Ashok Shankarrao Pawar	Economics	43-45
13	A Critical Study of Special Economic Zones in India	Dr. Shankar Ambhore, Dr. Dilip Arjune, Manish Parshuram Pawar, Dr. Ashok Shankarrao Pawar	Economics	46-48
14	Industrial Relations - Settlement of Disputes in India	Dr. Shankar Ambhore, Dr. Dilip Arjune, Manish Parshuram Pawar, Dr. Ashok Shankarrao Pawar	Economics	49-50
15	AMLA - ITS MEDICINAL USES	Manisha Gaur	Economics	51-52
16	The Role Of Total Quality Management In Higher Education	Ramesh B. Sakhiya	Education	53-55
17	Perceived Competencies Of Graduate Teacher Trainees In The Intensive Teaching Practice [I T P] Session	Dr M. Parimala Fathima, N.Sasikumar, M. Panimalar Roja	Education	56-58
18	Uchch Siksha Ki Rah Men Dushvariyan	Dr. Anup Chaturvedi	Education	59-60
19	Fault Diagnoses of Rotating Machinery with Advance Signal Processing Methods	Prof. Divyang H. Pandya, Prof. Ankit A. Darji	Engineering	61-63
20	A Hybrid Neural Network Approach for Wind Speed Prediction	S.N Deepa, K.gnana Sheela	Engineering	64-67
21	A Study on Phishing: Preventions and Anti-Phishing Solutions	V.Karamchand Gandhi, Prof R.Senthil Kumar	Engineering	68-69
22	The Killari 1993 Intracratonic Earthquake- a Comparative Study	S.S. Patil, K.L. Karkare, I.B. Ghorade	Environment	70-72
23	Cosmic Plants as Alternative Medicine	Dr. Sneh Harshendra Sharma	Environment	73-77

24	Green Initiatives for Reducing Carbon Footprint	Dr Mahalaxmi Krishnan	Environment Science	78-79
25	Prediction of Urban Sprawl in Hyderabad City using Spatial Model, Remote Sensing and GIS Techniques	S. Indhira Gandhi, Dr. V. Madha Suresh	Geography	80-81
26	Tectono-Provenance and Reservoir Rock Characteristics of the Tipam Sandstones in Parts of Upper Assam Basin	Dr. Pradip Borgohain	Geology	82-84
27	(Jansanchar Aur Bharatiya Samaj)	Dr Subodh Kumar	Journalism	85-86
28	An Overview of Industrial Disputes Settlement Authorities in India	Manish Parshuram Pawar, Dr. Ashok Shankarrao Pawar	Law	87-88
29	Innovative Method of Role Play for Developing English Language Teaching and Learning	K Rajkumar	Literature	89-91
30	Impact of Workers Participation in Management on Industrial Relations	Anuradha Averineni	Management	92-93
31	Consumers Preferences , Behaviour and Satisfaction with respect to banking services quality in Ghaziabad(NCR Region)	Prof(Dr.)H. P. Pandey, Mr. Ashish kumar Singh	Management	94-96
32	Factors Influencing Employee Branding in Higher Educational Institutions: A Special Reference to Management Institutions in Virudhunagar District in Tamilnadu	Jegadeeswari. Mani, Dr. S. Franklin John S.	Management	97-98
33	Evaluation of Service Quality in Internet Banking: An Empirical Study in Coimbatore	Ms. R. Gokilavani, Dr. R. Ganapathi	Management	99-101
34	To Study the Relationship Between Gender & Banking Preferences of Management Graduates at Ibmrd, Ahmednagar	Rajendrasingh Pardeshi, Gadekar Vithal Laxman	Management	102-103
35	FCB model of Advertising Strategy	Prof. Arvind Rathod	Management	104-107
36	Assessing Beneficiary Satisfaction with Service Delivery of Non Governmental Organizations (NGOs)	Dr Papori Baruah, Bhaskar Jyoti Barthakur	Management	108-111
37	Current Trends in Human Resource Management	Dr. Kalyani Kenneth, Mrs.R.Aruna jayamani	Management	112-113
38	“Indian Banking – A Future Ahead”	Haresh B. Barot	Management	114-116
39	Financial Inclusion-Banking Services to the Common Man	Dr. M. Venkata Subba Reddy, Mr. M.s.udaya Banu	Management	117-118
40	A study of Service Marketing Mix w.r.to b-schools in Mumbai	Dr. Balaji S. Mudholkar	Management	119-120
41	A Study on the Customers Opinion on the Benefits of the Credit Cards Around Combatore District	Mrs. G. Murali Manokari	Management	121-123
42	A Study on the Job Satisfaction of the Employees at Sri Kannan Departmental Stores, Coimbatore	Mrs. G. Murali Manokari, Mrs.r.kanaka Rathinam, Mr. G. Lenin Kumar	Management	124-126
43	Foreign Direct Investment In Indian Retail Sector: A Critical Evaluation	Dr. Raghavendra Dwivedi, Ram Kumar	Management	127-128
44	Emerging Challenges to Cyber Security-Internet Monitoring with Specific reference to National Security	Triveni Singh	Management	129-131
45	An Empirical Study of Consumer Impulse Buying Behavior in domestic Markets (special reference to Ahmednagar, (M.S) India.)	Gadekar Vithal Laxman	Marketing	132-135
46	Insomnia and the performance of general population: Results from the Insomnia Survey	Miss Ketaki Sathe, Dr G S Shekhawat	Medical Science	136-137
47	Transition in Human Resource for Health: Challenges Ahead	Dr. Pawan Kumar, Dr. Abdul Majeed Khan	Medical Science	138-139

48	Kartageners Syndrome- A Case Report	Dr. Ramakrishna Ghubde, Dr. Archana Shekokar	Medical Science	140-141
49	Perceptual challenges in auditory neural processing in neurodegenerative conditions like Fredereich Ataxia	Mr. Ayas Muhammed, Ms. Archana, Dr. Rajashekhar	Medical Science	142-143
50	Transient Auditory Dysynchrony Due to Non-Maturational Causes Evidenced by ABR – A Case Report	HariPrakash. P, Sangeetha. G, Bhargavi P.G	Medical Science	144-146
51	Study on Sphenoid Sinsuses Variants in Magnetic Resonance Imaging of South Indian Population	Suresh Sukumar, Sushil Yadav	Medical Science	147-148
52	A Study to Find out the Prevalence and Effectiveness of Occupational Therapy Intervention for Pain and Activity Performance in Mobile Users with Risk of Repetitive Strain Injury	KR.Banumathe, V.Guruprasad, Leena Ann Lukose	Medical Science	149-151
53	Modified Falls Behavioral Scale for Indian Community Dwelling Older Adults	V.Guruprasad, Sebestina A D'Souza, KR.Banumathe	Medical Science	152-154
54	The Essence of Employees Training and its Impact on the Work Force in an Industry	Dr. Mohan Singhe	Organization Behavior	155-156
55	Scientific Behaviourism of Watson and Hull : A Philosophical Perspective	Dr. Jatinder Kumar Sharma	Philosophy	157-158
56	The growth of manganese oxide thin films by spray pyrolysis technique	M.Sudha, P.Duraisamy	Physics	159-161
57	Terrorism and Competitive Terrorism in India	S. Sreejith, P. Sakthivel	Political Science	162-164
58	Kuposhan Se Karahta Bachpan	Dr. Anup Chaturvedi	Social Science	165
59	A new species of MicroveliaWestwood, 1834 from India	V.K. Khandelwal	Zoology	166-167
60	Agent Based Distribution Network Control Using DER	Sanjay J. Patel	Engineering	168-169

Research Paper

Volume : 1 | Issue : 2 | July 2012 • ISSN No 2277 - 8179

Agent Based Distribution Network Control Using DER.

Engineering

KEYWORDS: Smart distribution system, agent, voltage agent framework and DER (Distributed energy resources).

Sanjay J. Patel | Electrical Engineering Department, Govt Polytechnic-Jamnagar, Gujarat(India)-

ABSTRACT

A voltage agent has been proposed to give insightful control in smart distribution system. Because of their incredible advantage like adaptability, independence, less support, extensibility. The utilization of control dissemination system is equipped for settling on savvy choice for the benefit of shopper. The fundamental goal is to plan a voltage operator framework that make an administration of a dissemination system , which secure basic loads.

INTRODUCTION

A savvy dispersion system forces propelled detecting advancements and control strategies to synchronize with primary network. The keen appropriation ought to have taking after characteristics[1]:

- Provide great force quality which is fundamental for 21st century.
- Accommodate all era and storage options. Consumer agreeable.
- Self-mending .
- Operate effectively

Working of a voltage agent for shrewd dispersion network is the primary center of this paper. Specific, we will concentrate on application idea of operators in a shrewd conveyance system. Keen appropriation system is characterized as a vitality framework in which stacks and circulated vitality resources(DER) can work in parallel with the fundamental matrix. The routine electric force frameworks, can be control of by Supervisory Control and Data Acquisition (SCADA) frameworks [1],[2] Current situation to screen and control the operation of electric force frameworks are changed by the utilization of a computerized specialist innovation, which is for the most part known as a multi-agent framework. A multi-agent framework is a mix of a few specialists working with together to accomplish wanted objective of the framework. The multi agent framework has turned into a capable device for creating complex frameworks.

The multi-agent framework is autonomous and having the ability to take own choices and they work without human mediations. The multi-agent framework can interface with different operators by means or some likeness thereof of operator correspondence language in short , the multi agent framework can take objective arranged choice. A little dispersion system is controlled by multi agent framework which comprise of PV generators, batteries and controllable burdens is examined in [3], [4], [5]. The reclamation of a force framework in shipboard dissemination framework with help of multi agent framework is talked about in [6], when upstream blame or fundamental matrix blackouts detected by voltage operator it instantly respond to permit the dispersion system to work self-rulingly in an island.

VOLTAGE-AGENT SYSTEM DESIGN AND APPLICATION :

To improvement multi agent(i.e. voltage specialist, control operator, recurrence specialist, database agent...) numerous specialist improvement toolboxs are accessible, Taking after are operator advancement toolkit:

1. JADE
2. Zeus
3. Voyager.
4. Springs
5. Tracy
6. Trallian
7. Skeleton Agent.

Out of them operator stage ought to be chosen so it can be all around acknowledged. In this paper JADE specialist advancement toolbox is utilized, as comparison of various operator improvement toolkit is not introduced here. Fig demonstrates the engineering of multi specialist.

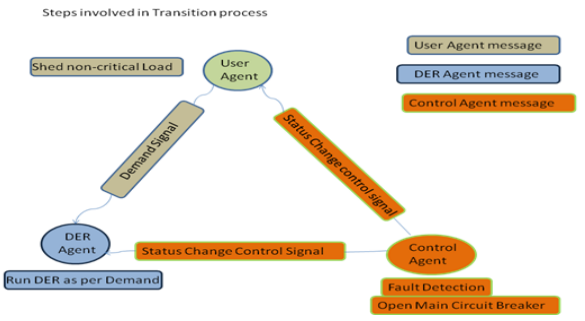

Figure :1 Architecture of multi agent system.

Multi agent framework comprise of four agent
1. control agent (voltage agent)
2. user agent (load agent)
3. DER agent
4. Database agent.

Each agent has unique identification and responsibilities which work together to achieve desired goal.

EXECUTION OF THE VOLTAGE AGENT SYSTEM IN A SIM-ULATED SMART DISTRIBUTION NETWORK

The goal of this reproduction is to show the capacity of proposed voltage-specialist framework which can encourage the consistent move of the Smart dispersion system from the network associated mode to the island mode when an upstream outage(faults) and voltage unsettling influence is recognized. The reenactment setup, the contextual analysis portrayal and results are talked about underneath.

Simulation Circuit

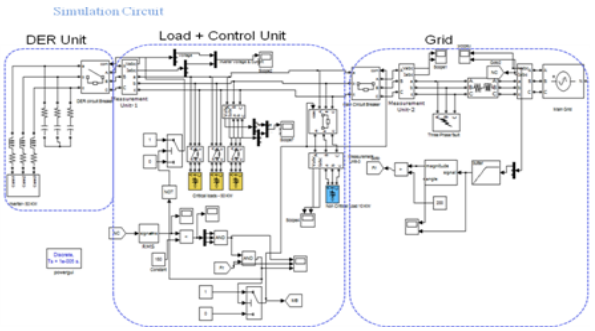

Fig: 2 Smart distribution network simulation model using DC source.

Figure 2 demonstrates keen Distribution system reenactment model by applying D.C vitality wellspring of 900V. This appropriation framework reproduction proving ground has base force 50KW and base voltage is 400V[9]. In this, circuit connected DC voltage is changed over into AC voltage by three stage all inclusive extension power converter. Sounds created by exchanging component can be decreased by consonant channel through a modification of parameter named quality variable and tuning recurrence. For ordinary method of operation, Distribution system can devour power from three stage programmable voltage source known as utility matrix whose voltage stays steady at 400V intensive the framework. Taking after are the means for building operator.

Step-1 identification of appropriate specialist building apparatus
Today no of business and open-source multi-specialist frameworks building toolboxs are accessible which is said beforehand.

Step-2 Development of the multi-agent framework A multi-agent framework is produced utilizing taking after strides.
1. Specify capacity and duty of every operator.

2. Create operator and code era.
Step-3 Integration of the voltage-Agent System and the Distribution system The voltage-operator and the keen Distribution system recreation are two diverse programming which is co-ordinate each other by trading message together utilizing TCP/IP convention.

Step-4 Result approval utilizing contextual analyses Taking after contextual analysis illustrated.

CASE STUDY : Transition from grid-connected to islanding mode

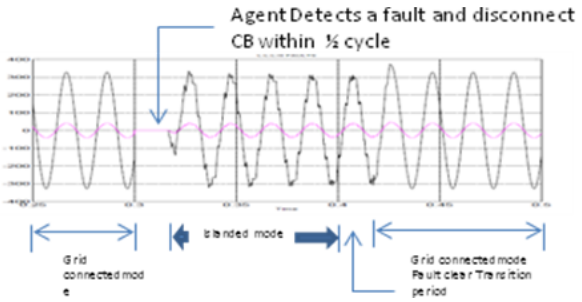

Fig :3 Current and voltage waveform : transition from main grid to islanding mode.

voltage-agent is fit for secluding a keen dispersion arrange and giving a move from matrix associated with islanding mode. Contextual analysis 1 has been mimicked for 1 second utilizing the reproduction circuit.

RESULTS DISCUSSION:
Case Study : Transition from grid-connected to islanding mode.
Once the voltage (control) agent identifies the shortcoming at t = 0.3, the voltage operator advises the client operator and the DER operator, both of which trade data and decide the measure of burdens to be shed and the measure of energy to be delivered inside with a specific end goal to balance out the circulation system. Contingent upon the pre-characterized load need set by a client and the accessible inward era, the client specialist detach non-basic burdens because of inaccessibility of additional force principle electrical switch shut down at 0.52 sec due issue clear at 0.5 sec, basic load waveform appeared in figure 3.

CONCLUSION:
This paper examines the use of voltage-operator in savvy dissemination system. Specialists trade their messages by means of TCP/IP convention. The application usage procedure is delineated through a continuous reenacted contextual investigation, which shows that the voltage-agent can detach and settle the keen conveyance system from the nearby utility when upstream outages(faults) identified. This outlines the capacity of a voltage-agent as an innovation for dealing with the savvy dissemination system operation. this work goes for exhibiting a use of voltage-specialists in a savvy dispersion system.

REFERENCE
[1] R. Krutz, Securing SCADA systems. Wiley Publishing, Inc. 2006.|[2] D. Bailey and E. Wright, Practical SCADA for industry. Newnes,Oxford, UK, 2003.|[3]A.Dimeas and N.D Hatziargyriou, "A MAS architecture for microgrid control", In Proc. 2005 the 13th International Conference on Intelligent Systems Application to Power Systems, November, 5pp.|[4] A. Dimeas and N.D Hatziargyriou, "Operation of a multiagent system for microgrid control", IEEE transaction on power systems, Vol. 20, No.3, August 2005. pp. 1447-1455.|[5] A. Dimeas and N.D Hatziargyriou, "A multi-agent system for microgrids", In Proc. 2004 IEEE Power Engineering Society General Meeting, Vol. 1, pp. 55-58.|[6]K. Butler-Purry, N. Sarma and I. Hicks, "Service restoration in naval shipboard power systems"; In Proc. 2004 IEE Generation,Transmission, and Distribution, Vol. 151, No. 1.|[7] Pipattanasomporn, M.; Feroze, H.; Rahman, S., "Multi-agent systems in a distributed smart grid: Design and implementation," Power Systems Conference and Exposition, 2009. PSCE '09. IEEE/PES , vol., no., pp.1,8, 15-18 March 2009.



Sara Publishing Academy
INTERNATIONAL JOURNAL OF SCIENTIFIC RESEARCH
Journal for All Subjects

The Editor,
INTERNATIONAL JOURNAL OF SCIENTIFIC RESEARCH
8-A, BANAS, Opp. SLU Girls College, NR. Congress Bhavan,
Paldi – 380006. Ahmedabad-Gujarat. (INDIA)
Contact: +91 98247 02127, +91 88660 03636
Website : www.theglobaljournals.com
Email Id: ijsr@theglobaljournals.com

Printed at Unique Offset, Novatsing Rupam Estate, Opp. Abhay Estate, Tavdipura, Shahibaug, Ahmedabad