Research Paper

Volume : 3 | Issue : 7 | July 2014 • ISSN No 2277 - 8179

Design and Development of Regenerative Pump Impeller using CFD Techniques

Engineering

KEYWORDS : Rapid Prototyping, Regenerative pump, CFD

PV Senthiil — Head, Advance Manufacturing Technology, Mechanical Engineering, St.Peters University, Chennai-600054

VS Mirudhuneka — SAP Consultant, IBM Ltd, DLF Tower, Porur, Chennai

ABSTRACT

This paper presents a method of rapid manufacture used in the development of a regenerative pump impeller. Rapid manufacturing technology was used to create complex impeller blade profiles for testing as part of a regenerative pump optimization process. Regenerative pumps are the subject of increased interest in industry. A modified impeller blade profile, relative to the standard radial configuration, was evaluated with the use of computational fluid dynamics and experimental testing. Prototype impellers were needed for experimental validation of the CFD results. The manufacture of the complex blade profiles using conventional milling techniques is a considerable challenge for skilled machinists. The complexity of the modified blade profiles would normally necessitate the use of expensive CNC machining with 5 axis capability.

INTRODUCTION

REGENERATIVE PUMPS:

Regenerative flow pumps and compressors have found many applications in industry; however they are the most neglected turbo machines in terms of research. The number of publications existing in the literature is comparatively less than papers dealing with centrifugal and axial turbo machines.

Regenerative pumps are also known as peripheral pumps, side channel pumps, drag pumps, turbine pumps, traction pumps, tangential pumps, or vortex pumps. In contrast to other popular types of continuous flow machines in which the fluid passes through the impeller once, the regenerative machines have the fluid exposed to the impeller many times.[1,2]

The repetition of the action of the impeller blading on the fluid is, in effect, `multi-staging', which makes regenerative machines capable of developing high-pressure ratios in a single impeller. Each passage through the vanes may be regarded as a conventional stage of compression. The main characteristic of a regenerative pump is its ability to generate high head at low flow rates. It has a very low specific speed and shares some of the characteristics of positive displacement machines such as root blowers, but without problems of lubrication and wear. In addition to self-priming characteristics, the main advantage offered by a regenerative pump is the ability to develop much higher heads than any other type of turbo machine with the same tip speed. When a regenerative flow pump/compressor (RFP and RFC) is applied as a gas compressor there is a further advantage of no surge or stall instability. Although the efficiency of RFP or RFC is not very high, usually less than 50 percent, they are used widely in industry.

LITERARURE REVIEW

Wilson et al. [14] presented a simplified model to permit the development of a theoretical analysis of the three dimensional fluid motion inside a regenerative pump. He made several assumptions and applied fluid dynamic equations to arbitrary control volume of the pump. Iverson [15] analyzed regenerative pump performance in terms of shear stresses imparted to the fluid by the impeller. The performance equations were derived by considering a linear system with a linear motion of rough surface. A force balance on the fluid in the horizontal flow channel was applied to derive performance equations. Theories for the flow of compressible fluid in regenerative turbo machines are rarely found in the literature. Burton [16] made an effort in this direction and reported a simplified theory, which took account of area change and compressibility effects in regenerative turbo machines. The theoretical models discussed above used radial blade impellers. Six smith [17] replaced the radial blades by blades with an airfoil section and developed a theory. Song et al. [1] modified the momentum exchange theory by Wilson et al. [14] to the developing region of the regenerative pump. Their proposed model is effective for performance prediction at design point. However, owing to inaccuracy of some proposed loss models and slip factor correlations, it is not capable of accurately predicting the off-design flow conditions.

MOTIVATION

All the previous theories rely on assumptions not based on detailed measurements or detailed CFD calculations which would lead to better understanding of the complex flow inside the regenerative pump.

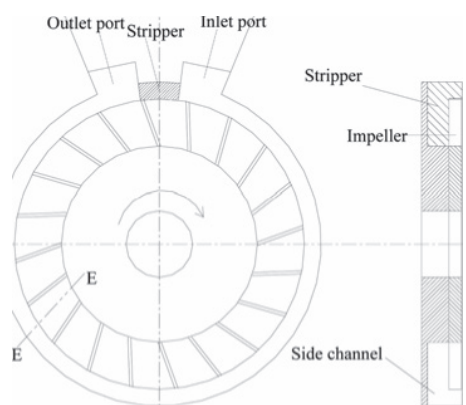

Previous mathematical models do not describe the flow characteristics very well as they are based on simplified assumptions. An improved model is proposed by T Meakhail and S O Park [10] for the pump performance. The model can handle one inlet angle and two exit angles for the impeller blades and it can be used for the design of twisted blades that would increase the pump head and efficiency. A new feature of the pump characteristics based on the proposed model is discussed. It is shown that the proposed model yield results that are in good agreements with the experimental results. The new model also shows that the side-blade exit angle has a major effect on the performance of regenerative pump, which has not been accounted for in the previous theory.

These previous theories help in developing the regenerative pump performance and its efficiency. Many Industries have the usage of the pumps. The enhancement of pump efficiency is required by the industries. So in this paper an idea of developing the pump efficiency is executed using CFD Software.

SPECIFICATIONS OF REGENERATIVE PUMP IMPELLERS

A regenerative pump of standard specification is taken as the base model and other models are taken as modified model of the impeller. This standard regenerative pump is the pump which currently exists in the market. The specifications of this pump given by the company in the market are as follows.

Flow Rate	-40 lpm/ 6 m height
Power	-½ HP
RPM	- 2880
Maximum Current	- 2.4 amps
Suction Inlet diameter	- 1 inch
Delivery Outlet diameter	- 1 inch
Hydraulic Efficiency	- 35%

Total head in metre / discharge in lpm

Total head (m)	6	12	18	24	30
Discharge (lpm)	40	30	24	20	15

Dimensions of the standard impeller

Diameter	- 65 mm
Thickness	- 7.5 mm
Number of Vanes	- 36
Vane inlet blade angle – β_1	- 90°
Outlet blade at its side – β_{2S}	- 90°
Outlet blade at its tip – β_{2t}	- 90°

STANDARD IMPELLER

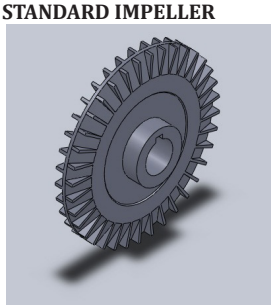

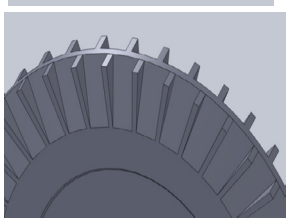

Modified Impeller	–	1
Impeller diameter	-	65 mm
Thickness	-	7.5 mm
No. of vanes	-	36
Vane inlet blade angle	– β_1	45°
Outlet blade at its side	– β_2	45°
Outlet blade at its tip – β_{2t}	-	90°

MODIFIED IMPELLER - 1

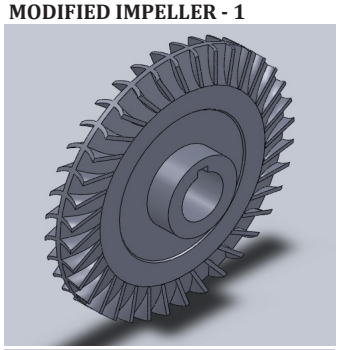

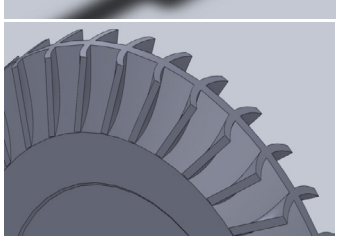

The first modification was made to predict the changes in the pump performance due to the only change of vane inlet angle and vane outlet angle at its side. The second modification is a slight change, where there is change in the position of the vanes on the either side of the impeller. In modification-1 the vane position is kept as per the previous theories. But this vane position is alternatively kept on either side of the pump and checked the performance tests through CFD. Other dimensions are kept as per the modification-1.

MODIFIED IMPELLER – 2

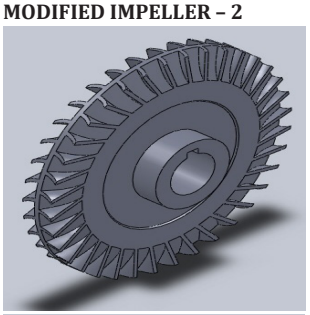

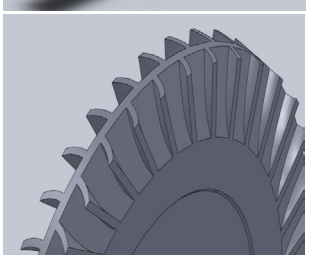

Reason for Modification – 1

The flow mechanism and the velocity vectors around the blade is shown in following fig., the CFD results for two blades with different side angle (β_{2S})at the blade tip and different inlet angle (β_1) for the same exit angle (β_{2t}; radial blades). From the figure, we find that the angles (β_1) and (β_{2s}) have a direct effect on the velocity vector around the blade at its hub and its tip, which affect the performance of the pump.

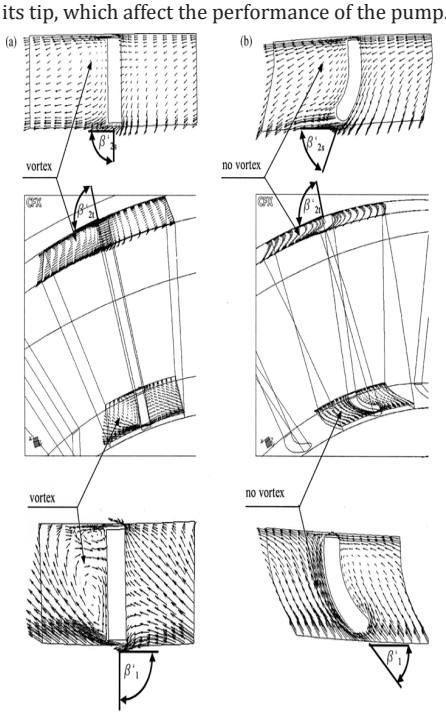

Reason for Modification – 2

The first modification was made to predict the changes in the pump performance due to the only change of vane inlet angle and vane outlet angle at its side. The second modification is a slight change,

Volume : 3 | Issue : 7 | July 2014 • ISSN No 2277 - 8179

where there is change in the position of the vanes on the either side of the impeller. In modification-1 the vane position is kept as per the previous theories. But this vane position is alternatively kept on either side of the pump and checked the performance tests through CFD. Other dimensions are kept as per the modification-1.

COMPUTATIONAL FLUID DYNAMICS

Fluid (gas and liquid) flows are governed by partial differential equations which represent conservation laws for the mass, momentum, and energy.

Computational Fluid Dynamics (CFD) is the art of replacing such PDE systems by a set of algebraic equations which can be solved using digital computers.

CFD analysis process

1. Problem statement - information about the flow
2. Mathematical model -IBVP = PDE + IC + BC
3. Mesh generation -nodes/cell, time instants
4. Space discretization -coupled ODE/DAE systems
5. Time discretization - algebraic system Ax = b
6. Iterative solver -discrete function values
7. CFD software -implementation, debugging
8. Simulation run -parameters, stopping criteria
9. Post processing -visualization, analysis of data
10. Verification -model validation / adjustment

CFD SOFTWARES

- ANSYS CFX
- FLUENT
- STAR-CD
- FEMLAB
- FEATFLOW

From the above given type of software we use Fluent to check the analysis. It is made for both standard and two modified impellers.

CFD Analysis

CFD Analysis for Standard Impeller

The analysis is run to check the efficiency of the pump

Efficiency of the Pump $\eta = \frac{Output\ Power}{Input\ power}$

Output Power = Pressure x Flow rate

Pressure=55876.53Pascal..... (Refer table .1)

Flow Rate = 40 lpm = $\frac{40}{1000 \times 60}$ = 0.000667 m^3/s

Input power=Angular momentum x Torque (table .2)

Angular momentum $\omega = 2\pi N/60$

$= 2x\ \pi\ x\ 2880\ /\ 60$

$= 301.59$ rad/s

Torque = 0.2892 n-m

Efficiency of the Pump η =0.428 = 43% (Hydraulic)

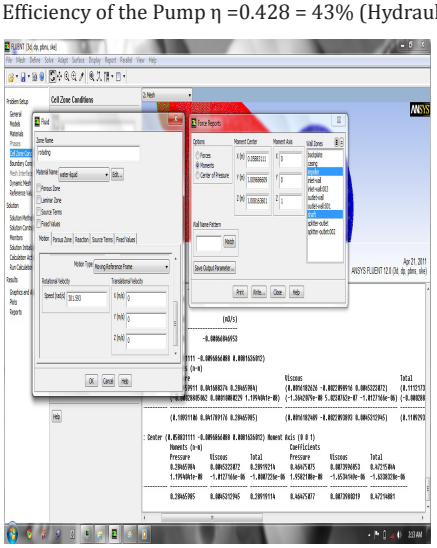

Comparison with Standard Values

	Standard Value	CFD value
Pressure(Pascal)	53860	55786.531
Hydraulic Efficiency	35-40%	43%

Analysis – 2

For Modified Impeller -2

The analysis is run to check the efficiency of the pump

Efficiency of the Pump $\eta = \frac{Output\ Power}{Input\ power}$

Output Power = Pressure x Flow rate

Pressure 88385 Pascal... (refer table .4)

Flow Rate = 40 lpm = $\frac{40}{1000 \times 60}$ = 0.000667 m^3/s

Input power=Angular momentum x Torque (table .3)

Angular momentum $\omega = 2\pi N/60$

$= 2x\ \pi\ x\ 2880\ /\ 60$

$= 301.59$ rad/s

Torque = 0.295102 n-m

Efficiency of the Pump η =0.66239 = 66% (Hydraulic)

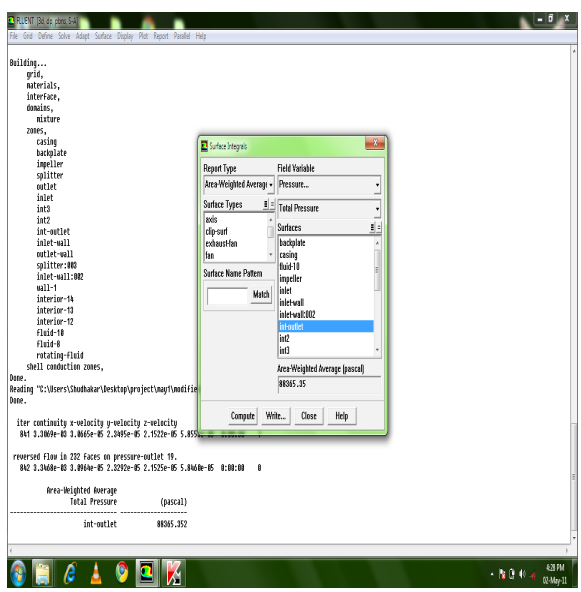

Comparison with Standard CFD Values

	Standard Impeller CFD Value	Modified Impeller-1 CFD value
Pressure(Pascal)	55786.531	88365.352
Hydraulic Efficiency	43%	66%

Analysis – 3

For Modified Impeller – 2

The analysis is run to check the efficiency of the pump

Efficiency of the Pump $\eta = \frac{Output\ Power}{Input\ power}$

Output Power = Pressure x Flow rate

Pressure = 93846 Pascal

Flow Rate = 40 lpm = $\frac{40}{1000 \times 60}$ = 0.000667 m^3/s

	Modified Impeller-1 CFD value	Modified Impeller-2 CFD value
Pressure	88365.352 Pa	93846
Hydraulic Efficiency	66%	69%

Input power=Angular momentum x Torque (table .5)
Angular momentum ω = 2πN/60
= 2x π x 2880 / 60
= 301.59 rad/s
Torque = 0.3000833 n-m

	Standard Impeller CFD Values	Modified Impeller-1 CFD value	Modified Impeller-2 CFD value
Pressure	55876.53	88365.352	93846
Hydraulic Efficiency	43%	66%	69%

Efficiency of the Pump η =0.6916443 = 69% (Hydraulic)

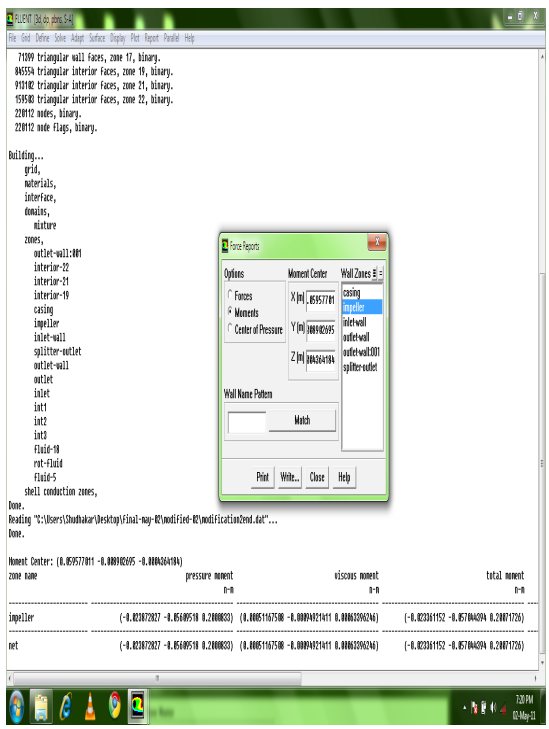

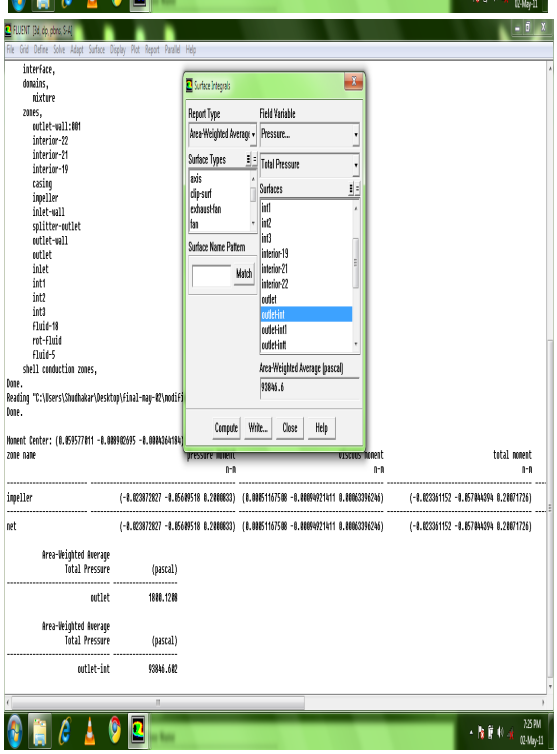

Comparison with Modified Impeller - 1

Comparison of Three Analysis

- **RAPID MANUFACTURING**

Fabrication with rapid prototyping methods may be divided broadly into those involving the addition or the removal of material.

In this paper, RP systems are considered to build prototypes for the regenerative pump impeller using 4 axis milling machine, fused deposition modeling (FDM).

RP is an acronym for Rapid Prototyping while SRP is an acronym for Subtractive Rapid Prototyping. Subtractive Rapid Prototyping is used to describe traditional CNC cutting where generally material is removed from a solid block with a rotating cutter. In the strictest sense Rapid Prototyping applies to both additive and subtractive processes since both create prototypes in a relatively rapid fashion. In recent years, Rapid Prototyping has generally referred to the innovative additive processes which build a model up one layer at a time. This additive process allows the creation of extremely complex parts that cannot be produced by traditional Subtractive Rapid Prototyping machines. RP parts are generally created as conceptual models for designers and manufacturers to evaluate at the product development stage RM parts are usually made for inclusion in a finished product.

Regenerative Pump impeller is to be manufactured through Rapid Manufacturing techniques. Fused Deposition Modeling (FDM) is used to manufacture the impeller. Since 4 axis machining is required for manufacturing the impeller, we choose the RM as the best option to create the model.

The above modified Impellers have very complex blade profiles. They need 4 axis CNC machining for manufacturing. Instead of going for Manufacturing of those complex profiles in CNC machines, it can be manufactured through Rapid Manufacturing techniques. Fused Deposition Modeling is one of the Rapid Manufacturing techniques which will Suite for manufacturing the modified Impellers under study, which can be used for testing by doing experiments.

RESULT

The CFD analysis thus helps in developing the pump is well. The above given comparison results show the effects on the pump performance by modifying the vane dimension. The twisted vane profiles show more effect on the pump performance. However there are some leakages in the three analysis. Since the only change made is vane profiles the leakages in the three analyses are the same. The complex blade profiles require 4 axis CNC milling machines, so for developing a single component Rapid Manufacturing is the best method.

- **CONCLUSION**

There are a number of conclusions which may be drawn with regard to effectively matching the regenerative pump CFD model with the experimental data. CFD results produced a reasonable representation of the flow in a regenerative pump and are being utilized to focus investigation for unit performance improvement. As the capabilities of CFD continue to develop, it is to be expected that the uncertainties associated with CFD prediction should also reduce. At the very least it is to be expected that there will be a continuing growth in processing power for the foreseeable future, which will reduce and perhaps remove the geometric simplifications which have to currently be made. The ability to test and validate the models is only possible through detailed experiments. This work has been useful to not only benchmark current regenerative pump design, but gives confidence in the ability of CFD optimization for the design to increase the performance of the pump in the future [12, 13,]. The findings of this optimization work will be presented in a future paper. The remarkable increase in the number of commercially available RP and RT solutions since the 1990s by advances in three-dimensional CAD modeling, computer aided manufacturing, computer numerical control and the development of new materials, are the reason this work proceeds.

REFERENCE

1. EUROPEAN PARLIAMENT. "Establishing a framework for the setting of eco design requirements for energy-using products", DIRECTIVE 2005/32/EC (2005) | 2. BADAMI, M: "Theoretical and experimental analysis of traditional and new peripheral pumps" SAE Technical Papers Series, No 971074 (1997) | 3. ENGEDA, A.: "Flow analysis and design suggestions for regenerative flow pumps" ASME FEDSM2003-45681 (2003) | 4. ENGELS, H.: "Untersuchungen an Ringpumpen ", Tech Hoch Hannover. 1 (1940) | 5. RAHEAL, M., ENGEDA, A.,: "Systematic design approach for radial blade regenerative turbomachines" Journal for Propulsion and Power Vol. 21(2005) | 6. SENOO, Y "Theoretical research on Friction Pump" Institute of Fluid Engineering Vol 5 No1pp 23-48 (1948) | 7. SONG, J. W., ENGEDA, A., CHUNG, M.K, "Modiifed theory for the flow mechanism in a regenerative lfow pump" Proceedings IMECHE , Vol 217 (2003) Power and Energy WILSON, W.A., SANTALO, M.A., OELRICH, J.A.: "A Theory of the lfuid dynamic mechanism of regenerative pumps"Trans. ASME No.8 (1955) | 8. STRATASYS Web page, Stratasys Inc., Eden Prairie, min¬nesota, 2001, www.stratasys.com | 9. IVERSON, H. W. : "Performance of the Periphery Pump" –ASME Vol 7 pp 19-22 (1955) | 10. MEAKHAIL, T., PARK, S.O,.: "An Improved theory for regenerative pump performance." IMECHE Vol 219 Part A (2005) | 11. SHIH, T.H., LIOU, W.W., SHABBIR, A., YANG, Z., and ZHU, J., , "A New k-å Eddy-Viscosity Models for High Reynolds Number Turbulent Flows-Model Development and Validation", Computers Fluids, 24 (3), pp. 227-238. (1995) | 12. SPALART, P., ".Trends in turbulence treatments" .AIAA paper (AIAA 2000-23 06) (2000) | 13. Song J. W., Engeda A., and Chung M. K. A modified theory for the flow mechanism in a regenerative flow pump. Proc. Instn Mech. Engrs Part A: J. Power and Energy, 2003, 217, 311-321. | 14. Wilson, W. A., Santalo, M. A., and Oelrich, J. A. A theory of the fluid-dynamic mechanism of regenera¬tive pumps. Trans. ASME, 1955, 77, 1303-1316. | 15. Iverson, H. W. Performance of the periphery pump. Trans. ASME, 1955, 77, 19-28. | 16. Burton, D. W. Review of regenerative compressor theory. Rotat. Machin. Gas-Cooled Reactor Applic., 1962, TID-7631, 228-242. | 17. Sixsmith, H. and Altmann, H. A regenerative com¬pressor. Trans. ASME J. Engrg Ind., 1977, 99, 637-647. | 18. Meakhail, T., Seung O. P., Dae Sung Lee, and Mikhail S. A study of circulating flow in regenerative pump. Proceedings of the KSAS 1st International Session. 2003, Gyeongju, pp. 19-26. | 19. Badami, M. Theoretical and experimental analysis of traditional and new periphery pumps. SAE Technical Paper Series, no. 971074, 1997, pp. 45-55. | 20. Grabow, G. Influence of the number of vanes and vane angle on the suction behavior of regenerative pumps.Proceedings of Second Conference on Flow Machines, October 1966, Budapest, pp. 147-166. | 21. Abdou, H., El-sallak, M., and Mikhail, S. Effect of some geometrical variables on performance of peripheral pumps. M.Sc. Thesis, Faculty of Engineering, Cairo University, 1996. |