Research Paper

Volume : 3 | Issue : 11 | November 2014 • ISSN No 2277 - 8179

Design and Fabrication of Digital Oil Level Indicator

Engineering

KEYWORDS : Temperature Sensor, Float Sensor, Rotational Viscometer

A.ShyamKumar	Final Year Mechanical Engineering,Saveetha School of Engineering,Saveetha University-602105 chennai
S.Surya Nishanth	Final Year Mechanical Engineering,Saveetha School of Engineering,Saveetha University-602105 chennai
S.Thulasi Raman	Final Year Mechanical Engineering,Saveetha School of Engineering,Saveetha University-602105 chennai
N.Rajkumar	Final Year Mechanical Engineering,Saveetha School of Engineering,Saveetha University-602105 chennai
A.Velmurugan	Assistant Professor Mechanical Department, Saveetha School of Engineering,Saveetha University-602105 Chennai

ABSTRACT

The aim of our project is to monitor the level of the oil in the vehicle oil tank and to automatically indicate the level information through LCD display.The main blocks are micro controller unit, oil level sensor and LCD display unit. The oil level detection circuit is used to detect the level of the oil in the tank here sensors are placed at certain places to find out the oil level and the signals are sent to the micro controller unit for further operations. Here sensors are placed at various places to sense the oil level and the signals from these sensors are sent to the micro controller unit to decide the exact level information. When the oil level reaches the top level sensor which means that the tank is full and this will be indicated to the user by means of the level information is indicated through LCD. By this same method the other sensors are working accordingly. The temperature sensor will sense the temperature of the oil. The viscous meter will sense the viscosity of the oil. Here the level information is displayed in terms of percentage and this information is preprogrammed according to the sensor position. The oil level indication is set to execute once for medium level and for high level and it will repeat continuously for the low level until the user fills the level of the oil correctly.

1. INTRODUCTION

If you drive a car, you've probably heard this one piece of advice countless times: Make sure your vehicle gets regular oil changes to preserve the life of your engine. Regular changes are required because the oil that lubricates and helps to cool your engine has a limited useful life. If it becomes too contaminated with dirt and metal shavings, it'll wear down your vehicle's internal engine parts. Oil can also lose viscosity, or become too thin, with the unpleasant result that it can't properly keep your engine's parts from grinding against one another.But let's face it; changing your vehicle's oil is messy and inconvenient when you do it yourself. If you're disciplined, you might even go to the trouble of writing down the date and odometer reading of your last oil change, as well as when your vehicle is due for another service. It's only slightly less inconvenient to bring your car or truck into a quick-lube establishment, having to take time out of your busy schedule. And what if your oil is actually fine and doesn't necessarily need to be changed at a 3,000-mile (4,828-kilometer) interval? In that case, you may be placing an unnecessary burden on the environment by contributing to the pumping, transport, packaging and disposal of those extra quarts of oil.

Direct measurement oil life indicators measure the condition of the oil -- the opposite approach to the system described above. This method uses sensors to sample the oil and determine its remaining life based on any of the following:

- Conductivity -- how easily electric current passes through the oil (typically, the lower the electrical resistance, the more contaminants are in the oil)
- Mechanical properties -- piezoelectric sensors can tell how thick the oil is by the force feedback it gives when sloshing around
- Soot concentration -- dirty oil's days are definitely numbered
- Presence of water -- water is an impurity in oil, since it hampers the oil's effectiveness and can corrode metal surfaces

2. TYPES OF OIL USED IN VEHICLES]:

a) POWER STEERING FLUIDOriginally invented for heavy motor vehicles, power steering is a feature that aims to make the job of maneuvering a vehicle easier. Almost all modern vehicles on the market today come with power steering systems that make the steering much lighter to turn

b) GEAR/TRANSMISSION OILThere are different types of gear oil for automatic and manual gearboxes as they function differently. It would be worth mentioning that some modern automatic gearboxes are emerging which manufacturers recommend do not need a gear oil change for as long as 2,40,000kms owing to a low-friction design.

C)BRAKE OILAutomobile braking systems work on hydraulics and lubricating fluid called brake oil is necessary for them to function. Brake oil has evolved to ensure better operation and reliability of the system.DOT 3, DOT 4, DOT 5 and DOT 5.1 are the types of brake oil listed corresponding to their boiling points as they work in very high temperature environments. DOT 3 and DOT 4 brake oils are most commonly used.

d)COOLANT OILA coolant is a fluid which flows through or around a device to prevent its overheating, transferring the heat produced by the device to other devices that use or dissipate it.An ideal coolant has high thermal capacity, low viscosity, is low-cost, non-toxic, and chemically inert, neither causing nor promoting corrosion of the cooling system.

e) ENGINE OIL Engine[1] oil lubricates moving metal parts of an internal combustion engine and averts overheating and excessive wear and tear. The microscopic particles resulting from the friction of the moving metal parts are held in suspension by the engine oil.

3. FLOAT SENSOR

It consists of the floater which will float towards the fluid medium. The floater will float at certain level and that level will sends the information to mc (micro controller). The micro controller will receive the information and display through the level by values as programmed.

Rated Voltage	10 (8 A) 250 V-10 (4 A) 380 V (recommended work for 240V DC voltage)
Rated Current	10 (8 A)~10(4)A
The power rating	1 KW
Working Temp. Range	0~60°C(plastic),-10~170°C (stainless steel)
Electric Life Expectancy	2.5x104
Mechanical Life Expectancy	2.5x105
Cable Length	3 m, 4 m, 5 m, 10 m, and other special length and material can be customized
Applicable medium	Water, sewage, oil and moderate levels of the soda acid liquid

Table 1.Specification of Float Sensor

4. TEMPERATURE SENSOR

This sensor is placed on the cranks of the engine. The sensor will measure the temperature of the oil present in the oil cranks2. This will send the information to mc (micro controller). The coded c++ program will calculate accordingly and show the result via LCD display as numerical values in oc.

5.ROTATIONAL VISCOMETER

Rotational viscometers use the idea that the torque required to turn an object in a fluid is a function of the viscosity of that fluid. They measure the torque required to rotate a disk or bob in a fluid at a known speed. As the thickness increases the rotation of the motor speed decreases. The rotation of the speed will be indicated through LCD display via microcontroller

6. CONSTRUCTION AND WORKING

The micro controller unit, oil level sensor and LCD display unit are the main blocks of this project. By using the oil level detection circuit, we can detect the level of the engine oil in the vehicle's engine oil tank. In this project, we placed the sensors at various places to detect the oil level of the vehicle's oil tank. The sensors will detect oil level and sends the signals to the micro controller unit to determine the exact oil level information, temperature, and impurities information.When the oil level in the oil tank reaches the top level sensor. The LCD display will display the oil level information. In this project, the level information is displayed in terms of percentage. This information is programmed according to the position of sensor. By using this project, the user can check the oil level, temperature, viscosity level in his vehicle's oil tank(3). This project is user-friendly and it works very efficiently.

7. Cost estimation and diagrams

Sl.NO	COMPONENTS	COST IN RUPEES
1	Digital meter	500
©	Float sensor	2000
3	Temperature sensor	1800
4	Rotational viscometer	1500
5	Micro controller	400
6	Tank	300
	Total	6500/-

Table 2. Costing

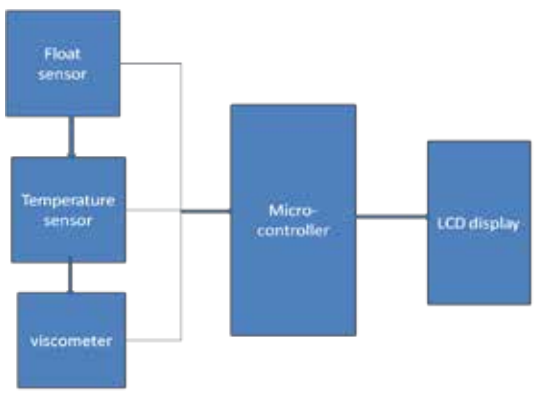

Figure 1 Block Diagram of Digital Oil Level Indicator

8. CONCLUSION:

The oil level detection circuit is used to detect the level of the oil in the tank here sensors are placed at certain places to find out the oil level and the signals are sent to the micro controller unit for further operations. Here sensors are placed at various places to sense the oil level and the signals from these sensors are sent to the micro controller unit to decide the exact level information. When the oil level reaches the top level sensor which means that the tank is full and this will be indicated to the user by means of the level information is indicated through LCD. By this same method the other sensors are working accordingly. The temperature sensor will sense the temperature of the oil. The viscous meter will sense the viscosity of the oil.This project is user-friendly and it works very efficiently.

REFERENCE

[1] "Oral History Panel on the Development and Promotion of the Intel 8048 Microcontroller". Computer History Museum Oral History, 2008.p. 4.Retrieved 2011-06-28. | [2] C. A. Grimes, E. C. Dickey, and M. V. Pishko (2006), Encyclopedia of Sensors (10-Volume Set), American Scientific Publishers. ISBN 1-58883-056-X | [3] M. Kretschmar and S. Welsby (2005), Capacitive and Inductive Displacement Sensors, in Sensor Technology Handbook, J. Wilson editor, Newnes: Burlington, MA. | [4] Augarten, Stan (1983). "The Most Widely Used Computer on a Chip: The TMS 1000". State of the Art: ISBN 0-89919-195-9. Retrieved 2009-12-23. |