Research Paper

Volume : 3 | Issue : 11 | November 2014 • ISSN No 2277 - 8179

Design and Fabrication of Pedal Operated Hacksaw

Engineering

KEYWORDS : Hacksaw, Relative Motion, Kinematic Pair, Frame

Thangaprakash	Final Year Department of Mechanical Engineering,Saveetha School of Engineering, Saveetha University-602105 chennai.
Naresh	Final Year Department of Mechanical Engineering,Saveetha School of Engineering, Saveetha University-602105 chennai.
G.Venkatesh	Final Year Department of Mechanical Engineering,Saveetha School of Engineering, Saveetha University-602105 chennai.
N.S.Vishal	Final Year Department of Mechanical Engineering,Saveetha School of Engineering, Saveetha University-602105 chennai.
Suresh Kannan	Final Year Department of Mechanical Engineering,Saveetha School of Engineering, Saveetha University-602105 chennai.
A.Sivasubramanian	Assistant Professor Department of Mechanical Engineering, Saveetha School of Engineering, Saveetha University-602105 Chennai.
Dr.G.Arunkumar	Professor & HeadDepartment of Mechanical Engineering, Saveetha School of Engineering,Saveetha University-602105 Chennai.

ABSTRACT

The Pedal Powered Hacksaw Machine is a device which is used for cutting wood, plastic and metals. The basic principle of this machine is slider crank mechanism, which is an inversion of four bar mechanism. The concept of this mechanism is that the rotary motion is converted into reciprocating motion. The mechanism has four links connected to form sliding pair. Thus when one link is moved along the circumference of the circle, the final link will generate the sliding movement for cutting process.

1. INTRODUCTION

A hacksaw is a handheld tool used to cut through materials like plastic tubing and metal pipes. Its cutting mechanism is provided by removable blades which feature sharp teeth along their outer edge. In most cases, a hacksaw consists of a metal frame that resembles a downward-facing. A handle of plastic, wood, or metal is typically affixed to one end of the frame. The frame's ends feature adjustable pegs that can be tightened to secure a blade in place, and loosened to remove it. Hacksaw blades are long, thin strips of hardened steel that feature a row of teeth along their cutting edge. Each end of the blade is punched with a small hole that fits onto the saw frame's pegs. Most blades range in length from ten to 12 inches (25.4 to 30.48 cm), although six-inch (15.24 cm) [3]blades can be purchased to fit smaller hacksaw models.A device that applies force, changes the direction of a force, or changes the strength of a force, in order to perform a task, generally involving work done on a load.Machines are often designed to yield a high mechanical advantage to reduce the effort needed to do that work.A simple machine is a wheel, a lever or an inclined plane. All other machines can be built using combinations of these simple machines. Example: A drill uses a combination of gears (wheels) to drive helical inclined planes (the drill bit) to split a material and carve a hole in it[2].

2. CLASSIFICATION OF KINEMATIC LINK[1]:

Based on Relative Motion between Links

a) Sliding Pair In a sliding pair minimum number of degree of freedom is only one. When two links are connected such that one link is slide over another link it forms a sliding pair.

b) Turning Pair In turning pair also degree of freedom is one. When two links are connected such that one link revolves around another link it forms turning pair.

c) Cylindrical Pair In cylindrical pair degree of freedom is two. If one link turns and slides along another link it forms a cylindrical pair.

d) Rolling Pair In a rolling pair degree of freedom is two. The object moves both linearly and angularly.

e) Spherical Pair In a spherical pair degree of freedom is three. It can both move left and right, up and down and rotate along the same point.

1.2.2 Based on Nature of Contact

a) Lower Pair

If contact between two links is surface contact also having degree of freedom one, then the pair is known as lower pair. Example: Sliding pair.

b) Higher Pair

If contact between two links is either point contact or line contact then the pair is known as higher pair. Example: Point contact – Rolling pair. Line contact Cylindrical pair.

3. Material Selection and Fabrication[4]:

S.NO	COMPONENTS	MATERIAL
1	PEDAL	FIBER AND STEEL
2	BASE	MILD STEEL
3	FRAME	MILD STEEL
4	HACKSAW	HIGH SPEED STEEL
5	PIPEVICE	MILD STEEL

Table 1. Materials

Drilling is the process of using a drill bit in a drill to produce holes. Under normal usage, scarf is carried up and away from the tip of the drill bit by the fluting. The continued production of chips from the cutting edges pushes the older chips outward from the hole. Lubricants or coolants (i.e. cutting fluid) are

sometimes used to ease this problem and to prolong the tools life by cooling, lubricating the tip and improving chip flow.

Drill (tool), cutting tool for making round hole in wood, metal, rock or other hard material. Tools for drilling holes in wood are commonly known as bits, as a certain specialized hard types of tools used in rock drilling.

4.CUTTING

Cutting is the process of using cutting tool to cut the workpiece with the help of hacksaw. The continuous cutting produce burs during the process. Lubricant or coolant can be used for ease cutting and to cool the heat which is produced in workpiece and the tool life can also be increased. Cutting can also be done in woods, metals, hard materials, etc.

5.WELDING

Welding is a fabrication or sculptural process that joins materials, usually metals or thermoplastics, by causing coalescence. This is often done by melting the workpieces and adding a filler material to form a pool of molten material (the weld pool) that cools to become a strong joint, with pressure sometimes used in conjunction with heat, or by itself, to produce the weld. This is in contrast with soldering and brazing, which involve melting a lower-melting-point material between the workpiece to form a bond between them, without melting the workpieces.

Many different energy sources can be used for welding, including a gas flame, an electric arc, a laser, an electron beam, friction, and ultrasound.

6. CONSTRUCTION AND WORKING

The cycle frame is fixed with the base mild steel by the process of welding The chain sprocket is connected to the cycle frame and it is connected to the pedals.The one end of the chain is connected to the big sprocket and the other end is connected to the small sprocket which is held in a chain hub.The other end of the hub is fixed with the small chain sprocket .From the other end of the hub another chain is connected to the sprocket and other end is connected to another small sprocket which is held with the circular rod and bearing setup.The circular rod is inserted into the bearing and is welded with the sprocket at one end and with rotating disc at the other end.The connecting rod is connected to the rotating disc at one end and to the hacksaw at the other end.

The hacksaw moves in fro motion when the pedal is powered, so as the rotating disc rotates.The pipe vice is fixed at the end to hold the work piece tightly in a straight position.As the pedal is powered by the human energy, the chain and rotates which makes the hacksaw blade to move in one and fro motion.When the hacksaw moves, the workpiece metal will be cut into a desired shape and the weight holder is fixed above the hacksaw to make the hacksaw blade to move.

7. Cost estimation and diagrams

S. NO	COMPONENT	COST (IN RS)
1	L-ANKLE	1000
2	SPROCKET	500
3	CHAIN	150
4	FRAME SETUP	500
5	PIPE VICE	600
6	LABOUR CHARGES	1000
7	OTHER EXPENSIVES	500
	TOTAL	4250

Table 2. Costing

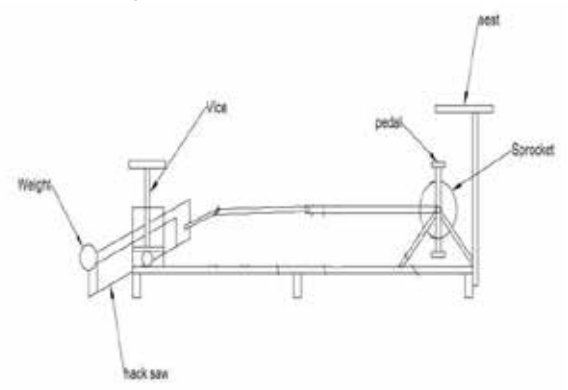

Figure 1 Line Diagram of Pedal Operated Hacksaw

8. Conclusion:

Thus the pedal powered hacksaw machine is designed tested successfully. The output is verified by cutting the metal pipes, plastics in the hacksaw by pedaling action. The following advantages were seen such as It is more convenient and easier. It is more eco-friendly.Power is not required.

REFERENCE

[1]R.S.Khurmi "Design of Machine Elements", Eurasnia publishing house 3 Pvt Ltd, 14th revised edition. | [2]Dr.V.Jayakumar "Design of Transmission Systems", Lakshmi Publications Pvt Ltd, 4th revised edition. | [3]PSG College of Technology "Design data Book", PSG College Publishment, latest 2011 revised edition. | [4]MATERIAL SELECTION AND TESTING OF HACKSAW BLADE BASED ON MECHANICAL PROPERTIES Prof. Nitinchandra R. Patel Mohammed A. Vasanwala2 Balkrushna B. Jani3, Miteshkumar D. Rathwa4Ravi A. Thakkar5-International Journal of Innovative Research in Science, Engineering and TechnologyVol. 2, Issue 6, June 2013 |