Volume : 2 | Issue : 8 | August 2013 • ISSN No 2277 - 8179

Research Paper

Identification of Black Spots and Improvements to Junctions in Bangalore City

Engineering

KEYWORDS : Traffic count, black spots, prioritization, signal timings, Remedial measures

NIKHIL.T.R	Assistant Professor, Department of Civil Engineering, Acharya Institute of Technology, Bangalore 560090, India.
HARISH J KULKARNI	Assistant Professor, Department of Civil Engineering, Acharya Institute of Technology, Bangalore 560090, India.
SARVADA H	Student 8 sem, Dept of Civil Engineering, Acharya Institute of Technology, Soldevanahalli, Bangalore-560090.INDIA

ABSTRACT

An accident black spot is a term used in road safety management to denote a place where road traffic accidents have historically been concentrated. It may have occurred for a variety of reasons, such as a sharp drop or corner in a straight road, so oncoming traffic is concealed, a hidden junction on a fast road, poor or concealed warning signs at cross-roads. Transportation contributes to the economic, industrial, social and cultural development of any country. Transportation by road is the only mode which could give maximum service to one and all. Due to the increase in population, number of vehicles is increasing day by day which leads to the increase in road network. It has been estimated that over 30,000 persons die and over 10 to 15 million persons are injured every single year in road accidents throughout the world. The present work intended in identifying various black spots (accident prone location) in BANGALORE city. The causes of accidents are studied and suggested different remedial measures to reduce number of accidents.

The four main strategies are: single site or black spot programs, mass action plans, route action plans, and area-wide schemes. The stages of the hazardous location improvement process are as follows:

• A good accident database; • Agreeing a local hazardous location improvement program; • Accident analysis to identify accident black spots; • Design of remedial measures; • Implementing the measures; and • Monitoring the effectiveness of remedial measures. Remedial measures can include better signs, road markings, pedestrian facilities, fencing, guardrails, junction modifications, and improvements to visibility. Traffic calming through various speed reduction measures has proven particularly effective where vulnerable road users are at risk.

1. Introduction:

Accidents, tragically, are not often due to ignorance, but are due to carelessness, thoughtlessness and over confidence. William Haddon1 has pointed out that road accidents were associated with numerous problems each of which needed to be addressed separately. Human, vehicle and environmental factors play roles before, during and after a trauma event. Accidents, therefore, can be studied in terms of agent, host and environmental factors and epidemiologically classified into time, place and person distribution. This paper lays emphasis on accident studies on Jalahalli Junction and Gorguntepalya Junction in Bangalore city. It is a four lane divided highway with shoulder and side drains. The open side drains exist for some part of the study stretch. The service roads exist throughout. For the purpose of the study, a Junction Traffic Accident (JTA) was defined as accident, which took place on the road between two or more objects, one of which must be any kind of a moving vehicle.

1.1 Literature Review:

In literature there is no universally accepted definition of a black spot. According to The Bureau of Transport and Regional Economics of Australia (2001) locations are in general classified as black spots after an assessment of the level of risk and the likelihood of a crash occurring at each location. At certain sites, the level of risk will be higher than the general level of risk in surrounding areas. Crashes will tend to be concentrated at these relatively high-risk locations. Locations that have an abnormally high number of crashes are described as crash concentrated, high hazard, hazardous, hot spot or black spot sites. Sites with potentially hazardous features are sometimes described as grey spots.

In general, the number of crashes is affected by three factors:-

- The road environment
- The condition of vehicles using the road system
- The skills, concentration and physical state of road users.

The demands of the road environment vary due to factors such as traffic flow rates, geometric features of the road and type of road. Drivers normally adapt their performance level to the demands of the road system. A crash occurs when the driver's performance level is insufficient to meet the performance demands of the road environment. Most of the time, driver capabilities exceed performance demands. Black spots are points of peak performance demand. Engineering improvements in the road network lower performance demands on the driver. This increases the safety margin between the driver's performance level and the performance demands of the road environment, and reduces the probability of a crash.

1.2. Road Safety Problem in developing countries

Growth in urbanization and in the number of vehicles in many developing countries has led to increased traffic congestion in urban centers and increase in traffic accidents on road networks, which were never designed for the volumes and types of traffic, which they are now required to carry. In addition, unplanned urban growth has led to incompatible land uses, with high levels of pedestrian-vehicle conflicts. The drift from rural areas to urban centers often results in large number of new urban residents unused to such high traffic levels. As a result, there has often been a severe deterioration in driving conditions and a significant increase in the hazards and competition between different classes of road users. In addition, the inherent dangers have often been made.

Figure No.1 Fatality Rates in Selected developing Counties

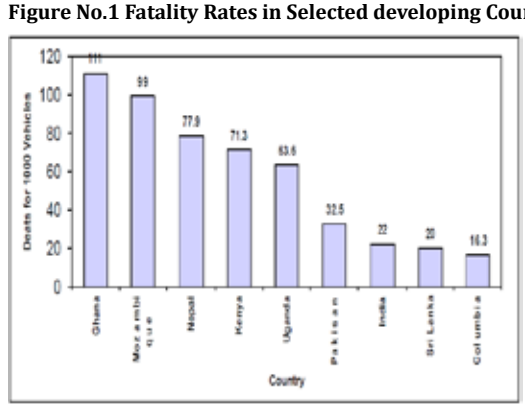

Volume : 2 | Issue : 8 | August 2013 • ISSN No 2277 - 8179

1.3 Accident Scenario in India

The spectacular growth in the Road Transportation Sector in India has been a key element in the economic development. In the country, more than 70,000 people die and nearly 4lakhs persons are injured in about 3 lakhs and more road accidents every year. The trend in road accidents and number of vehicles registered during the period from 1970 – 1995 are shown in Figure 2. India's motor vehicle population is just 1% of the world's, but her share of world road traffic accidents is 6%. Even though it can be observed from Figure 2 that the accident rate has been steadily decreasing over the past 25 years, the accident rate is still very high compared to the developed nations.

Figure No.2 Trends in Vehicle registration and accident rates in India from 1970-1995.

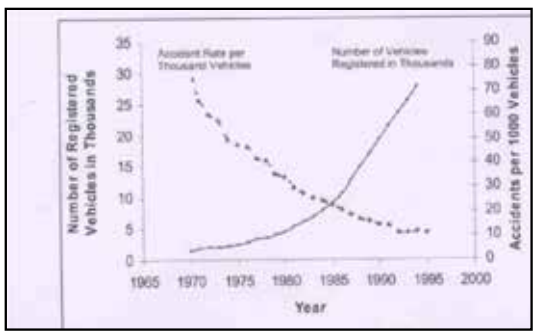

2.0 Accident Scenario in Bangalore

Central Road Research Institute (CRRI) Study report, (2008) reveals that the accident record of the country is among the worst in the world. Road accidents have registered a sharp increase recently following rapid growth in vehicle ownership, construction of high speed roads and expressways. Accident rates could go up further unless both traffic rules and road safety measures are enforced strictly. A review on the road crash analysis world over implies that the human factor attributes to the majority of accidents. A similar instance has been observed in India as well as in Bangalore. In Bangalore about 47% of road users killed are pedestrians & 40% are two-wheeler users. In additions to this annually more than Rs 1550 crores are paid as compensation to the victims & their dependents. Overall Bangalore's accident statistics is presented in the Table 1 and 2

Table No .1 BANGALORE ACCIDENT DATA

S.No	Year	Fatal	Killed	Non-Fatal	Injured	Total
1	2002	783	820	9073	7577	9856
2	2003	843	883	9662	7980	10505
3	2004	875	903	8226	6921	9101
4	2005	796	836	6782	5899	7578
5	2006	880	915	6681	6048	7561
6	2007	957	981	7469	6591	8426
7	2008	864	892	6908	6150	7772
8	2009	737	761	6138	5668	6875
9	2010	816	858	5667	5343	6483
10	2011	727	757	5297	4976	6024

(Source: Bangalore City Traffic Police, Bangalore.)

Table No .2 BANGALORE ACCIDENT DATA WITH KARNATAKA ACCIDENT DATA

Years	Karnataka State			Bangalore City		
	Total Accidents	Persons Killed	Persons Injured	Total Accidents	Persons Killed	Persons Injured
2002	35,654	6,366	45,769	9856	820	7577
2003	37,668	6,195	45,781	10505	883	7980
2004	38,896	6,496	50,365	9101	903	6921
2005	40,317	6,904	54,061	7575	833	5899

2.1 Motorization in Bangalore

The conversion of Bangalore from being once a "Garden City" to present "Black City" has been rapid. Bangalore has grown exponentially in the past two decades. The Booming Software, Biotech and manufacturing industries have magnified the requirements of basic and service employments, which generated and magnified urban sprawl into problematic proportions. Improvement in the quality of life along with substandard public transportation has resulted in spiraling growth of private automobiles. The resultant offshoot of such a high automobile growth along with supply intensive actions of the government is accidents. The Motorization index calculated by the author (vehicles for 1000 persons) best describes the high intensity of vehicular growth, which Iprojects that nearly every 3rd person owns a private vehicle. Motorization index has nearly doubled within a decade. This calculation is highly conservative since it does not consider high intensity of migration of persons with their vehicles from other parts of state to Bangalore. The high intensity of vehicular growth can be known from the simple area analysis. Karnataka State has 1,91,791 sq.kms of area whereas capital Bangalore as per revised

Estimates have 561 sq.kms of developed area, which works out to 0.29% of state area. Nearly 39-40% of vehicles registered in Karnataka state belong to Bangalore. Such a massive number of vehicles occupy 4.8% of total road length available in Karnataka. Availability of such a massive number of vehicles results in violation of individual spaces thus contributing to accidents.

3.0 Present Investigation

In the present study two major junctions Gorguntepalya and Jalahalli Cross located in NH-4 is considered.

Figure No.3 Gorgunte Palya Junction

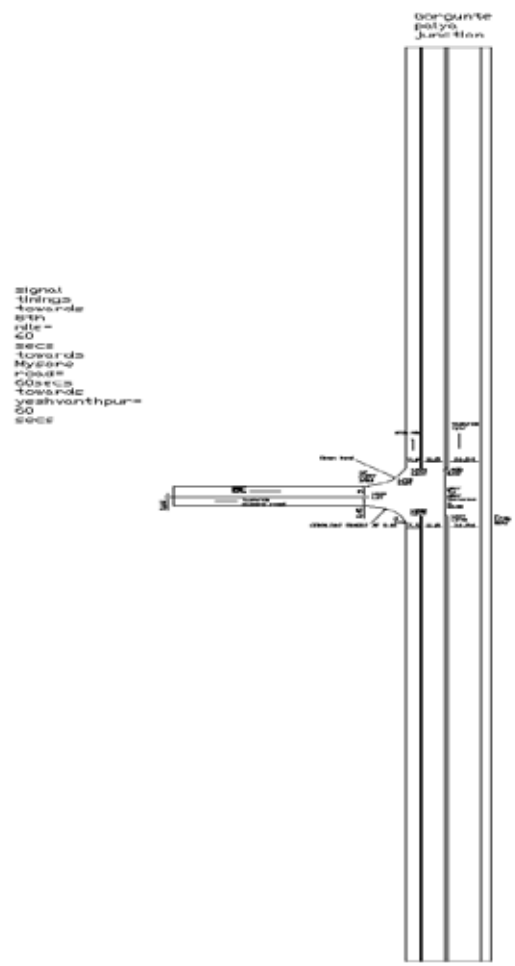

Figure No.4 Jalahalli Junction

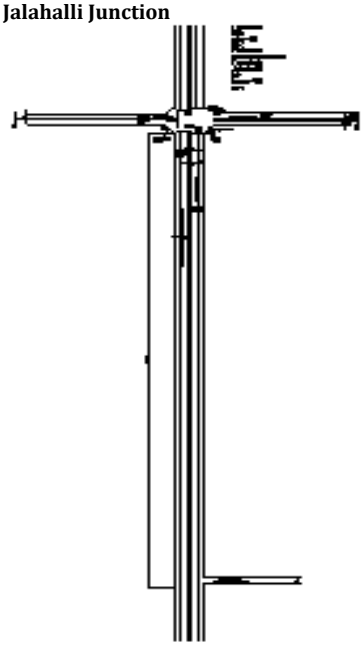

The details of accident in these two junctions were taken from nearest Traffic Police Station and 24 hours classified volume count survey was conducted at these two junctions. The details of accident and classified traffic volume count were given in Table No.3, 4, 5 and Table No.6 Respectively

Table No.3 Accident data at Gorguntepalya Junction

Year	Gorgunte Palya Junction				
	Fatal	Killed	Non Fatal	Injured	Total cases
2004	79	81	350	279	412
2005	79	75	364	266	405
2006	90	105	370	325	440
2007	70	73	389	327	437
2008	76	81	323	313	373
2009	43	51	303	310	323
2010	89	94	373	418	443
2011	52	63	352	360	381
2012	55	76	326	307	397

Table No.4 Accident data at Jalahalli Junction

year	Jalahalli Junction				
	Fatal	Killed	Non Fatal	Injured	Total cases
2004	51	52	336	258	387
2005	49	51	339	235	388
2006	71	72	349	300	420
2007	51	51	367	311	418
2008	49	52	302	297	351
2009	27	27	283	284	310
2010	63	68	347	325	410
2011	40	40	325	297	365
2012	46	48	314	272	360

Table No.5 Classified volume Count Data at Gorguntepalya Junction

Direction towards	Total/ Cumulative vehicles per day
VIVANTHA	12168
8 TH MILE	12147
MYSORE ROAD	23240

Table No.6 Classified volume Count Data at Jalahalli Junction

Direction towards	Total/ Cumulative vehicles per day
GORGUNTE PALYA	15650
8 TH MILE	13210
JALAHALLI VILLAGE	10250
PEENYA	14205

Signal Timings of the Aforementioned Junctions

1) GORGUNTEPALYA
Towards Yeshvanthpur= 60 sec
From Yeshvanthpur = 60 secs
Towards Mysore road = 60 secs

2) JALAHALLI CROSS
Towards Jalahalli airforce base = 90 secs
Towards Peenya = 60 secs
Towards 8th mile = 60 secs
From 8th length = 60 secs

Figure No.3 Detailed measurement at Gorguntepalya junction





Volume : 2 | Issue : 8 | August 2013 • ISSN No 2277 - 8179



Figure No 4 Detailed measurement at Jalahalli junction







Table No.7 Pedestrian accident data in Bangalore city

Year	Total Killed	Total injured	Pedestrians Killed	Pedestrians Injured
1999	639	6026	257	1921
2000	659	6347	273	1968
2001	703	6929	282	2199
2002	820	7577	328	2362
2003	883	7980	348	2967

4. Discussions and Remedial Measures:

It is observed during the study that the Gorgunte Palya and Jalahalli Junctions were already declared Black Spot / accident zone. From the accident data we also observed that the accidents are increasing Inadequate sight distance, road condition, poor visibility at night, drivers negligence etc. It is also observed during study that there is lot of pedestrian deaths in spite of having Zebra crossing and pedestrian signals mainly due to high speed of vehicles, so it is suggested to construct speed brake or road humps before pedestrian signals.

During the study in Goguntepalya it is observed that there is poor vision of Piers of metro and loss of human life and damages to vehicle at night hours

The remedial measures suggested for Improvements of junctions are

1. Provision of Road humps before the pedestrian signals.
2. Provision of Road Humps in the stretches before Intersection or Junction point.
3. Installation of proper sign posts aside the roads.
4. Provision of Pedestrian underpass/ sky walk at certain places where pedestrian movement is more.
5. Improving the sight distance at the intersection by increasing the set back distances in the junctions.
6. Increasing the signal timings by twice to avoid the accumulation of vehicles to reduce the jam lengths.
7. Increasing the signal rest timings by twice to avoid accidents.
8. Increasing the skid resistance of the pavement
9. Repairs of cracked surface and filling up of pot holes to reduce the accidents.
10. Installation of cat eyes and road reflectors in the junctions and also near the road humps
11. Installation of reflectors to piers of Metro so that the accident caused due to collision against pier will be avoided

REFERENCE

[1] G D Jacobs and I.A. Sayer "Road accidents in developing Countries- urban problems and remedial measures" TRRL Supplementary report 839. | [2] B. Srinivas Rao and E. Madhu "Accidental study on National Highway – 5 between Anakapalli to Vishakpatnam" Proceedings of the Eastern Asia Society for Transportation Studies, Vol. 5, pp. 1973 - 1988, 2005. | [3] K. R. Shanmugam: Valuations of Life and Injury Risks- Empirical Evidence from India- Environmental and Resource Economics 16: 379–389, 2000. | [4] Mishaps HC suggests change in compensation pattern: Times of India-Bangalore edition, 13 Sep 2001 | [5] Mahesh Chand: Accident Scenario in Metropolitan Cities of India- published in Urban Transport journal-September2002