International Journal of Scientific Research

Indexed with International ISSN Directory, Paris

Volume 1 | Issue 3 | August 2012

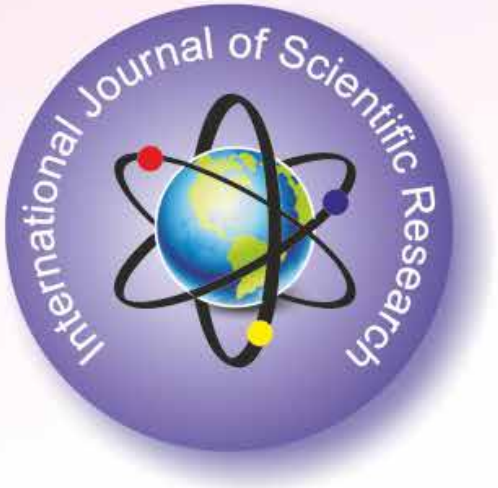

ISSN No. 2277 – 8179

A Multi-Subject Journal

ISSN No. 2277 – 8179

International Journal of Scientific Research

Journal for All Subjects

Advertisement Details

Position	B/W (Single Color)	Fore Color
Full Inside Cover	₹ 6250	₹ 12500
Full Page (Inside)	₹ 5000	-

Subscription Details

Period	Amount Payable
One Year (12 Issues)	₹ 3000
Two Year (24 issues)	₹ 5800
Three Year (36 issues)	₹ 8700
Five Year (60 issues)	₹ 14400

You can download the Advertisement / Subscription Form from website www.gra.in. You will require to print the form. Please fill the form completely and send it to the **Editor, International Journal of Scientific Research** along with the payment in the form of Demand Draft/Cheque at Par drawn in favour of **International Journal of Scientific Research** payable at Ahmedabad.

Editor-In-Chief

Khansa Memon
Editor, Sarah Publishing Academy

Editorial Advisory Board

Dr. Ashok S. Pawar
Associate Professor, Dept. of Economic
Dr. Babaasaheb Ambedkar
Marathwada.University, Aurngabad

Dr.(Prof) Vijay Kumar Soni
Principal,
Jai Meenesh College, Phagi,
Jaipur, Rajasthan

Dr. A.R. Saravankumar
Assistant Professor in Education
DDE, Alagappa University,
Tamilnadu

Dr.R.Ramachandran
Commerce Dde
Annamalai University
Tamilnadu India

Dr. R Ganpathy
Assistant Professor in Commerce
Directorate of Distance Education
Alagappa University Karaikudi.

Dr. Amit Bandyopadhyay
Assistant Professor
Department of Physiology
University of Calcutta

Dr. V. Kumaravel,
Professor and Head
Vivekanandha Buss. School for Women
Tiruchengode, Namakkal Dist

Dr. K. Prabhakar,
Professor,
Department of Manag. Studies,
Velammal Engg College, Chennai

Dr. Sunita J. Rathod
Maharashtra Education
Service Group-B
DIET Dist. Jalna

1. Thoughts, language vision and example in published research paper are entirely of author of research paper. It is not necessary that both editor and editorial board are satisfied by the research paper. The responsibility of the matter of research paper/article is entirely of author.
2. Editing of the **International Journal of Scientific Research** is processed without any remittance. The selection and publication is done after recommendations of atleast two subject expert referees.
3. In any condition if any National/International University denies accepting the research paper published in IJSR then it is not the responsibility of Editor, Publisher and Management.
4. Only the first author is entitle to receive the copies of all co-authors
5. Before re-use of published research paper in any manner, it is compulsory to take written permission from the Editor-IJSR, unless it will be assumed as disobedience of copyright rules.
5. All the legal undertaking related to **International Journal of Scientific Research** is subject to Ahmedabad Jurisdiction.
7. The research journal will be send by normal post. If the journal is not received by the author of research papers then it will not be the responsibility of the Editor and publisher. The amount for registered post should be borne by author of the research paper in case of second copy of the journal.

Editor,
INTERNATIONAL JOURNAL OF SCIENTIFIC RESEARCH
3, SUHANA, Nr. Rubi Apartment, B/H NID, Rajnagar Road,
Paldi – 380007. Ahmedabad-Gujarat. (INDIA)
Contact: +91 98247 02127, +91 88660 03636
Www.theglobaljournals.com | ijsr@theglobaljournals.com

INDEX

Sr. No.	Title	Author	Subject	Page No.
1	A Simple Teaching Module For Histology: Integration Of Traditional Hands-On Laboratory Methods And Modern Computer Technology.	Mrs. Vandana A. Tendolkar, Dr. Archana U.shekokar	Biotechnology	1-2
2	Synthesis And Studies On Metal Complexes Of 5-(Furan-2-Yl)-3- (2-Hydroxy Phenyl)1-H Pyrazole-1-Carbothiohydrazide	P.Saravana Bhava, P.Tharmaraj , S.Johnson Raja	Chemistry	3-6
3	Determination Of Inorganic Hazardous Air Pollutant Levels In Ambient Air Repairable Suspended Particulate Matter (P.m10) In And Around Tirupati, Chittoor District, Andhra Pradesh, India.	Mr.E. Shyam Sundar, Mr.P.M.N.Prasad, V. Hanuman Reddy, Dr. Y.V.Rami Reddy	CHEMISTRY	7-9
4	Adaptation and Convergence of International Financial Reporting Standards	Dr.S.K.Khatik, Mr.Binoy Arickal	Commerce	10-13
5	A Conceputal Framework Of Green Supply Chain Management	Dr. Vipul Chalotra	Commerce	14-15
6	Perspectives Of Food Processing In India Under Tourism Segment	Dr. S. Asaithambi	Economics	16-19
7	Global Business Perspectives Of Tourism In The Globalised Era	Prof. S. Selvamani, Dr. M. Perumal	Economics	20-22
8	A Study Of Trade Diversifications In Saarc Region	Dr.Dinesh Kumar, Sanjeev, Ruchi Singh	Economics	23-25
9	A study of professional commitment among B. Ed. Teacher educators of Bangalore University	Dr. Kotreshwaraswamy A. Surapuramath	EDUCATION	26-27
10	Self Concept of Collge Students	Dr. S. K. Panneer Selvam	EDUCATION	28-29
11	Leveraging Technology For Enhancing Teaching Effectiveness	Dr Mahalaxmi Krishnan	Education	30-31
12	Utilization Of Computers In Secondary Schools	Dr. Praveena, K. B.	Education	32-33
13	New Scheme For Data Hiding Using N-Ary Tree Structure	D.Sampath Kumar, N. Suma	Engineering	34-35
14	Bioaccumlation Of Heavy Metal In Labeo Rohita From River Panchgang.	Ms.Pallavi T.Kininge, Ms.Sushma C.Bondre, Dr.Milind Kale, Dr.M.M.Pillai., Ms.Amaraja Kulkarni	Engineering	36-39
15	Energy Optimization And Power Scheduling In Low Power Sensor Network	Prof.MS.Vaishali R , Prof.D.K.shende, Prof. MS. Shubhangi	Engineering	40-42
16	Analysis Of Power Transients In Transmission Devices For Stable Operation	Sunil Kumar Mahapatro	Engineering	43-45
17	Modeling Of Pv Module And Examining The Effect Of Irradiance In Matlab	Sangita S. Kondawar , Prof. U.B. Vaidya	Engineering	46-49
18	Role of ICT in Automobile Industry	Ms.A.Josephine Stella, Dr.K.Rajeswari	Finance	50-52
19	Collection And Services Of Special Libraries In Raebareli (India): A Survey	Dr. Sharad Kumar Sonker, Pooja	Library Science	53-55
20	Information Seeking Behaviour Of Medical & Engineering Professionals Of Lucknow: A Comparative Study	Vijeta Faraijia, Dr. M. P. Singh, Dr. Anurag Shrivastava	Library Science	56-60
21	Contact Details & Contact Number Of The Authors	Pushpendra Singh, Prof. K.L. Mahawar	Library Science	61-64

22	Indian Banking Industry: Competition And Opportunities	Bind Kumar Tiwary, Bind Kumar Tiwary	Management	65-67
23	Advertisement Attraction Of Vodafone Mobile Services Television Commercials With Special Reference To Erode District	Dr. V. M. Senthilkumar, Dr. P.Anbuoli	Management	68-70
24	A Study On Customer Satisfaction Towards Tvs Scooty In Thanjavur District Of Tamilnadu	Mrs. R.RENUKA, Dr. M. K. DURGAMANI	MARKETING	71-72
25	Jhumur Dance In Tea Gardens Of Barak Valley: A Development Dimension	Dr Partha Sarkar	Mass Communication	73-74
26	Cytohistopathological Correlation of Thyroid Swelling	Dr. Chetna J. Mistry, Dr. T. Y. Vijapura, Dr. Rupti K Pande	Medical Science	75-76
27	Can hormonal influence be a cause of auditory neuropathy	Ms.Archana, Mr.AyasMuhammed ,Ms. Maya,Ms.Jyoti	Medical Science	77-78
28	Application Of Auditory Evoked Potentials In Differential Diagnosis Of Acoustic Schwannoma From Jugular Foramen Schwannoma –A Case Report	Ms.Archana, Mr.AyasMuhammed, Ms.Saffa	Medical Science	79-80
29	Prevalence And Antibiotic Susceptibility Pattern Of Methicillin-Resistant Staphylococcus Aureus In A Tertiary Care Hospital, Jamnagar, Gujarat.	Dr. Viral P Shah , Dr. Neetu Mundra , Dr. Swati Vachhani , Dr. Hiral Y Shah , Dr. HIral Gadhvi , Dr. Hitesh Shingala , Dr. Mala sinha	Medical science	81-82
30	Audiological Profile In Osteogenesis Imperfecta: A Case Report	Ranjana Elizabeth James, Kishan M M, Prasanna V	Medical Science.	83-84
31	Preventive Modalities In The Management Of Obesity: A Review	Dr. Deep Inder , Dr. Pawan Kumar	Medical Sciences	85-86
32	Isolation And Antibiotics Susceptibility Patterns Of Acinetobacterbaumannii From Various Clinical Samples In Tertiary Care Hospital, Jamnagar , Gujarat.	Dr. Hiral Y Shah, Dr. Viral P Shah, Dr. Hiral MGadhavi , Dr. NeetuA Mundra , Dr. Hitesh K Singala , Mala sinha	Medical Sciences	87-88
33	Phenomenological Insights For A Critique Of Positivist Approach In Social Sciences.	Dr. Pardeep Kumar, Dr. Jatinder Kumar Sharma	Philosophy	89-90
34	Developing National Integration In India Through Physical Education Activities	Mr.S.Dhanaraj , Dr.A.Palanisamy	Physical Education	91-92
35	Microcontroller Based Color Measurement Using Rgb Leds	T. N. Ghorude , A. D. Shaligram	Science	93-95
36	Civil Society Role in Combating Corruption:A Small but Radical Idea	Dr.P. Sakthivel, Dr.H. Munavarjan	SocialSciences	96-97
37	Protozoan diversity of Kapsi lake kapsi (MS) India	Ade P. P.	Zoology	98-100
38	Cloud To Devising Messaging (C2dm) And Their Applications For Mobile Devices.	Biren M Patel, Vijaykumar B Gadhavi, Mr Ashish Kumar	Zoology	101-103

Research Paper

Volume : 1 | Issue : 3 | Aug 2012 • ISSN No 2277 - 8179

Microcontroller Based Color Measurement Using Rgb Leds

Science

KEYWORDS : colorimetry, chromaticity diagram, microcontroller and photo detector.

T. N. Ghorude — Department of Physics, N.B.Mehta Science College, BORDI Thane

A. D. Shaligram — Department of Electronic Science, University of Pune, Pune

ABSTRACT

This paper reports Microcontroller based color measurement by using RGB LED's. Colored papers are illuminated with RGB LED's and corresponding light intensity from a reflecting surface is detected using photo detector. The photo detector spectral characteristics were normalized. The reflectance for the colored surface is measured as ratio of reflected intensity to the emitted intensity. Reflectance for the three stimulation sources, these values are input to the microcontroller through ADC, a suitable program is stored in microcontroller to get X, Y, & Z by six segment interpolation over the wavelength range for BLUE 420nm to 480nm, GREEN 500nm to 600nm and RED 600nm to 700nm. Chromaticity coordinates and specific color is displayed on LCD. These chromaticity coordinates serve as the measure of surface color. The system has been tested for measuring the color of different shades paper and the chromaticity coordinates and color of the reflecting surface are also reported.

Introduction:

Colorimetry is a physical science that deals with objective and quantitative ways of describing color. Since the impression of color is something subjective – what one person perceive as "light blue" may look "medium blue" to another – it is not quite clear how to describe and identify different colors. Colorimetry tries to connect the notion of a standard color sample with the physical concept of light as a form of energy. [1].

It is thought that the retina of the human eye has three kinds of color sensors or cones with peak sensitivities for red, green, and blue light. This tristimulus theory is attractive since it allows us to think of color as a positively weighted sum of the primary colors red, green, and blue color lights with proper proportions. [2].

It has been known since the inception of color science that object colors are determined not only by the spectral composition of the light reflected from them but also by the spectral composition and brightness of the light reflected from the objects. [3].

Color in consumer products has become a distinctive feature of our modern society. From the cloths we wear, the cars we drive, and the houses we live in, to the shows we watch, books we read, and catalogues we shop from, color plays a central role. But it is not enough for an object to be colorful. The color must be "right" and in many cases it must "match". However, accurate reproduction of color is not an easy task, and part of the reason for this is not accurate color measurement is quite difficult, accurately measuring an objects color is far more difficult than accurately measuring its weight or size. There are many reasons for this uncertainty. First, many different standards and methods of measuring color are currently in use. Secondly, compatibility between instruments from different manufacturers is frequently poor. Thirdly, many artifacts and confounding factors complicate color measurement. Lastly, instrument repeatability is sometimes poor. To make color measurement accurate, suitable calibrations of the instrumentation are required. [4].

Theoretical background:

Prior to the time of sir Isaac Newton the nature of light and color was rather poorly understood. Newton's meticulous experiments with sunlight and a prism helped dispel existing misconceptions and led to the realization that the color of light depended on its spectral composition. Even though Grimaldi preceded Newton in making these discoveries, his book on the subject received attention much later, and credit for the widespread dissemination of the new ideas goes to Newton. While Newton's experiments established a physical basis for color, they were still a long way from a system for colorimetry.

Before a system to measure and specify color could be developed, it was necessary to understand the nature of the color sensing mechanism in the human eye. While some progress in this direction was made in the late 18th century, the prevalent anthropocentric views contributed to a confusion between color vision and the nature of light. The wider acceptance of the wave theory of light paved the way for a better understanding of both light and color.

Both Palmer and Young hypothesized that the human eye has three receptors, and the difference in their responses contributes to sensation of color. However Grassmann and Maxwell were the first to clearly state that color can be mathematically specified in terms of three independent variables. Grassmann also stated experimental laws of color matching that now bear his name. Maxwell demonstrated that any additive color mixture could be "matched" by proper amount of three primary stimuli, a fact now referred to as trichromatic generalization or trichromacy. Around the same time, Helmholtz explained the distinction between additive and subtractive color mixing and explained trichromacy in terms of spectral sensitivity curves of the three "color sensing fibers" in the eye. [5].

The three CIE standard weights can be calculated by using following equations:

$$Z = \sum_{380}^{780} R(\lambda)E(\lambda)\bar{z}d\lambda$$

$$X = \sum_{380}^{780} R(\lambda)E(\lambda)\bar{x}d\lambda$$

$$Y = \sum_{380}^{780} R(\lambda)E(\lambda)\bar{y}d\lambda$$

where R(l) is surface reflectance and E(l) is light source distribution. The weights X, Y and Z define a color in the CIE space x + y + z = 1, the result in a 2D space known as the CIE chromaticity diagram. The coordinates in this space are usually called x & y and they are derived from XYZ using following equations:

$$y = \frac{Y}{X+Y+Z} \qquad x = \frac{X}{X+Y+Z}$$

$$z = \frac{Z}{X+Y+Z}$$

$$z = 1 - x - y \qquad x + y + z = 1$$

General Block Diagram of Color decoder Setup

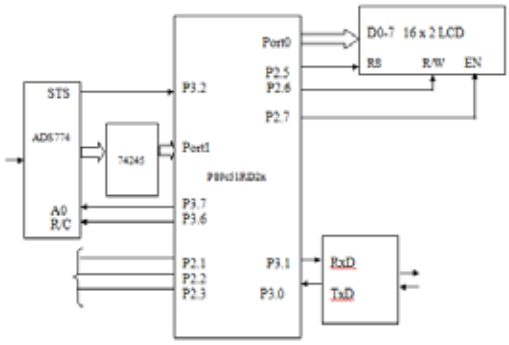

Fig 1 Color Decoder Setup

Figure 1 shows the Block Diagram for a color decoder setup. Three LED's are turn ON using microcontroller output. The unit takes photo detector output through the ADC interface.

Photo detector output is measure of reflectance from sample when sample is illuminated with

R/B/G LED. This output is converted in to digital using ADS774 –12 bit ADC. Now using assembly program reflectance is calculated for all the wavelengths between 380 nm to 780nm

Now using the values of X,Y,Z stored in the program memory and reflectance calculated for all the wavelengths between 380 nm to 780 nm

The three CIE standard weights are calculated by using following equations:

$$Z = \sum_{380}^{780} R(\lambda)E(\lambda)\bar{z}d\lambda \qquad Z = \sum_{380}^{780} R(\lambda)E(\lambda)\bar{z}d\lambda \qquad Z = \sum_{380}^{780} R(\lambda)E(\lambda)\bar{z}d\lambda$$

where R(l) is surface reflectance and E(l) is light source distribution.

The chromaticity coordinates are usually called x & y and they are derived from XYZ using following equation using assembly language program.

$$y = \frac{Y}{X+Y+Z} \qquad x = \frac{X}{X+Y+Z}$$

$$z = \frac{Z}{X+Y+Z}$$

Selecting a Microcontroller

Here we use P89c51RD2 microcontroller from Philips as it provides 64 K flash program memory and support core of 8051. It also offers built in BIOS which helps in programming the controller with flash magic software.

Selecting an ADC

The P89c51RD2[6] microcontroller is 8-bit controller so 8-bit analog-to-digital converters could be used; however, it was felt that this would not provide enough precision to represent reflectance data. As a result, a 12-bit ADC was used to accurately measure data. ADC used was ADS774 from Burr-brown[7]

Handshake signals of ADS774 used to select the 12-bit conversion mode of the IC, to send start conversion signal and check the end of conversion. Converted data is read with two read operations and stored in two memory locations. Then it is rearranged as 16-bit word.

Software:

Once the hardware had been wired, an assembly function READ_ADC was written to perform an analog-to-digital conversion and to read in the12-bit result through port P1 To do this, the timing specifications for the AD574 were studied from Data sheet of ADS774. Data read is stored in internal memory, each word for reflectance for blue, green and red LED's as source of illumination.

Six-segment interpolation function is called to find the reflectance for wavelength between 380 nm to 780 nm. All the values calculated are stored in internal R/W memory.

Then sum x function is called to find the sum of product of X values stored in program memory and reflectance calculated. Similarly then sum y function is called to find the sum of product of Y values stored in program memory and reflectance calculated. Then sum z function is called to find the sum of product of Z values stored in program memory and reflectance calculated. Finally these sum of products are added,

Then ratios of sum x to sum xyz and sum y to sum xyz calculated using division functions. Then the result is converted to a format which can be display on LCD.

Thus values displayed on LCD are x, y chromaticity co-ordinates of a sample.

Experimental work:-

In this paper we used CIE standard RGB data to develop different colors on computer. Then we took its print on white bond paper. These papers are used as samples in our experimental observation. We use detector circuit to measure reflectance for different color samples using R, G, B leds. We calculated x, y values using standard formula. During calculation we consider scale factor in order to consider offset in the amplifier and detector response.

Reflectance measured for different colors are as given in table I

Color	Reflectance for RED LED	Reflectance for GREEN LED	Reflectance for BLUE LED
Red	560	201	174
Pink	648	334	246
Reddish orange	637	237	179
Orange pink	636	315	225
Orange	537	282	176
Yellowish orange	547	313	175
Yellow	583	322	200
Greenish yellow	559	304	189
Yellow green	392	280	173
Yellowish green	387	277	180
Green	193	249	162
Bluish green	227	277	159
Blue green	338	249	211
Greenish blue	371	262	215
Blue	310	228	205
Purplish blue	307	238	201
Bluish purple	306	237	196
Purple	628	245	189
Reddish purple	534	225	188
Purplish pink	658	329	238

Volume : 1 | Issue : 3 | Aug 2012 • ISSN No 2277 - 8179

Red purple	442	200	176
Purplish red	538	230	186
White	638	358	252

We prepare table of x, y values for CIE standard data and observed data as shown below.

Color	x	y	x0	y0
Red	0.46	0.28	0.60	0.36
Pink	0.34	0.36	0.40	0.35
Reddish orange	0.45	0.41	0.56	0.38
Orange pink	0.36	0.37	0.43	0.37
Orange	0.44	0.47	0.51	0.44
Yellowish orange	0.45	0.52	0.49	0.46
Yellow	0.38	0.43	0.45	0.41
Greenish yellow	0.45	0.53	0.47	0.42
Yellow green	0.43	0.54	0.47	0.49
Yellowish green	0.37	0.47	0.44	0.46
Green	0.20	0.49	0.35	0.81
Bluish green	0.22	0.40	0.40	0.75
Blue green	0.26	0.34	0.35	0.35
Greenish blue	0.27	0.34	0.36	0.35
Blue	0.26	0.31	0.36	0.33
Purplish blue	0.26	0.30	0.36	0.36
Bluish purple	0.27	0.29	0.37	0.37
Purple	0.39	0.30	0.53	0.37
Reddish purple	0.38	0.28	0.52	0.36
Purplish pink	0.33	0.34	0.41	0.36
Red purple	0.38	0.25	0.57	0.37
Purplish red	0.39	0.29	0.52	0.37
White	0.32	0.35	0.39	0.36

Flow Chart for Computation of x , y chromaticity coordinates from reflectance

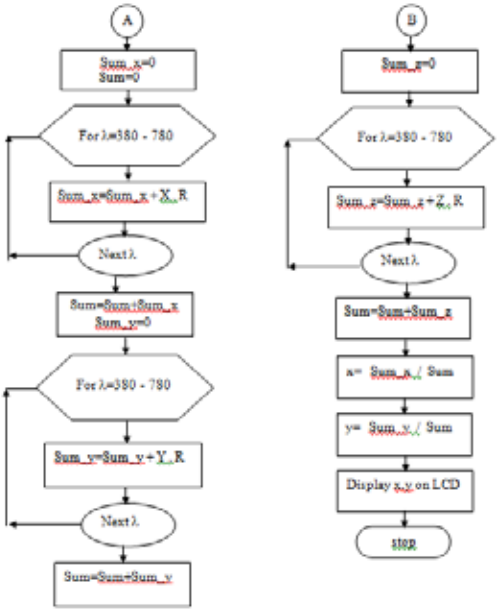

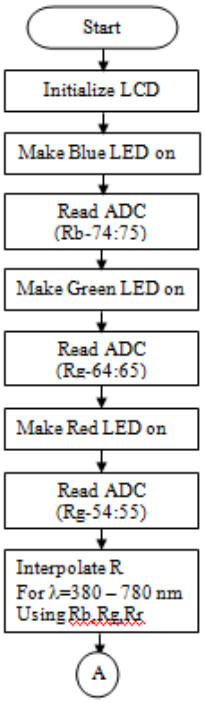

Result and Discussion.

Determination of the Chromaticity Coordinates of colored papers shows that they are very close to the Chromaticity Coordinates from CIE data. Determination of the Trichromatic Coordinates are good enough in many cases. Thus this is portable solution for color measurement.

REFERENCE

1.Kirk othmer, "Encyclopedia of chemical Technology", volume 5, 2nd edn, Interscience publishers, 1994, color and constitution of organic dyes, pp763-765, colorimetry and Fluorometry pp788-795, color measurement pp809-811. | 2.S. P. Bali, " color television theory and practice", Tata Mc Graw-Hill publication, 1994, ch.1, pp 1-12. | 3.J. Opt. Soc. Am. A/vol.7 No.9/sept.1990 by O. creutzfeld, B.Lange-Malecki, and E. Dreyer "Chromatic induction and brightness contrast: a relativistic color model pp 1644-1653. | 4."Reliability Issues for color measurement in quality control applications" By John C. Briggs, David J. Forrest, and Ming-Kai Tse QEA, Inc. Burlington, MA/USA. | 5.IEEE Transactions on Image processing, "Digital color Imaging" by Gaurav Sharma, member IEEE, and H. Joel Trussell, fellow IEEE, vol.6 No.7 July1997 pp 901-932. | 6.Data Sheet P89C51RD2 –Philips Semiconductors Data Hand Book | Data Sheet ADS774– Burr Brown Corporation |

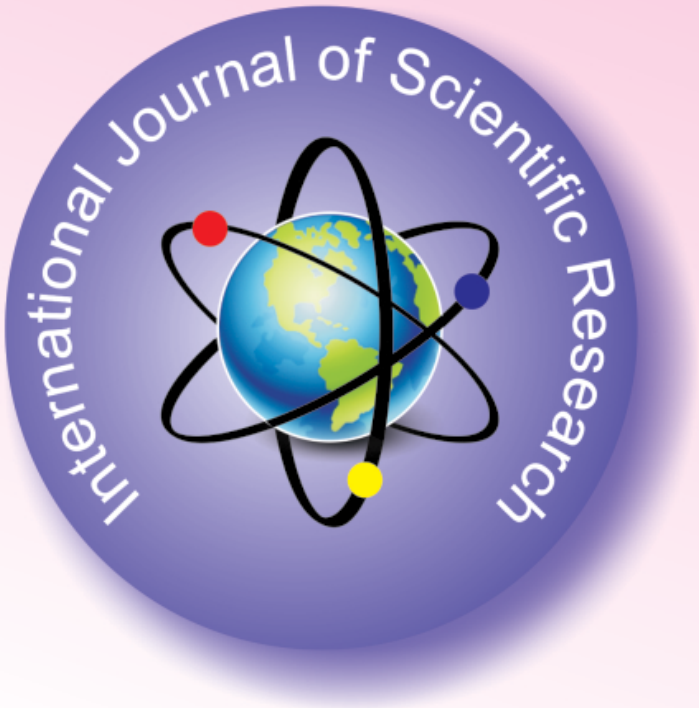

Sara Publishing Academy
INTERNATIONAL JOURNAL OF SCIENTIFIC RESEARCH
Journal for All Subjects

The Editor,
INTERNATIONAL JOURNAL OF SCIENTIFIC RESEARCH
8-A, BANAS, Opp. SLU Girls College, NR. Congress Bhavan,
Paldi – 380006. Ahmedabad-Gujarat. (INDIA)
Contact: +91 98247 02127, +91 88660 03636
Website : www.theglobaljournals.com
Email Id: ijsr@theglobaljournals.com

Printed at Unique Offset, Novatsing Rupam Estate, Opp. Abhay Estate, Tavdipura, Shahibaug, Ahmedabad