Volume : 3 | Issue : 10 | October 2014 • ISSN No 2277 - 8179

Research Paper

Engineering

KEYWORDS : EGM, Absorption system, Li-Br, optimization

Optimization of Solar driven Li-Br water absorption system using EGM method

Hussain Abdulhushen Pipwala

Flat No-5, Ayesha Apartment, Near jumma masjid, kot Parsiwad, Bharuch

ABSTRACT

As a result of the projected world energy shortage, the use of solar energy for environmental control is receiving much attention in the engineering sciences literature. A stimulation of the solar Li-Br VAR system is carried out that predicts the performance of the system under given ambient condition. An optimization tool namely genetic algorithm (GA) is used to find the optimized parameter at minimum entropy of the component.

1.Introduction

The performance coefficient of a VAR system can be calculated as a function of temperature. Entropy Generation Minimization (EGM) is a method of thermodynamic optimization of real systems that owe their thermodynamic imperfection to heat transfer, fluid flow and mass transfer irreversibilities. The EGM method is also distinct from exergy analysis. The following paper uses optimization strategies, genetic algorithm and the constrains of the system.

2. System Description

A Schematic diagram of a Solar Driven Lithium Bromide VAR system is shown in fig1.1. Evacuated solar tube collector is used to supply the heat required to drive the entire system. The conventional VAR system with capacity of 10 TR is considered.

The state points are shown in the schematic diagram

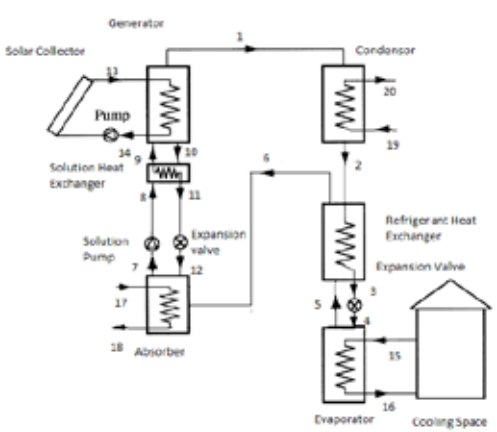

Fig 1.1 Schematic diagram of the system.

3. Mathematical Modeling and modelling entropy generation in system.

3.1 Energy and Entropy Generation in Generator

Mass balance equations of the solution and Li-Br at the generator can be written as,

$$\dot{m}_{ws} = \dot{m}_{ss} + \dot{m}_R \quad \text{Also} \quad \dot{m}_{ws} X_{ws} = \dot{m}_{ss} X_{ss}$$

The empirical expression for nucleate pool boiling is given by Rosenh

$$\frac{Q}{A} = \mu_f h_{fg} \left[\frac{g(\rho_f - \rho_g)}{\sigma}\right]^{0.5} \left[\frac{c_{pf}\Delta t}{C_{sf} h_{fg} \Pr_f^{1.7}}\right]^3 \quad (1)$$

The energy balance in the generator gives:

$$\dot{Q}_G + \dot{m}_{ws} h_9 = \dot{m}_R h_1 + \dot{m}_{ss} h_{10} \quad (2)$$

$$\dot{Q}_G = \dot{m}_R [h_1 + (f-1) h_{10} - f h_9] \quad (3)$$

$$\dot{S}_G = \dot{m}_R [s_1 + (f-1) s_{10} - f s_9] \quad (4)$$

3.2 Energy and Entropy Generation in Condenser

$$\dot{Q}_C = \dot{m}_R (h_1 - h_2) = \dot{m}_a (h_{20} - h_{19}) \quad (5)$$

$$\dot{S}_C = \dot{m}_R (s_2 - s_1) + \dot{m}_a (s_{20} - s_{19}) \quad (6)$$

3.3 Energy and Entropy Generation Refrigerant Heat Exchanger

The effectiveness of Heat Exchanger is given by:

$$\varepsilon_{RHE} = \frac{t_6 - t_5}{t_2 - t_6} \quad (7)$$

$$\dot{Q}_{RHE} = \dot{m}_R (h_2 - h_3) = \dot{m}_R (h_6 - h_5) \quad (8)$$

$$\dot{S}_{RHE} = \dot{m}_R (s_3 - s_2) + \dot{m}_R (s_6 - s_5) \quad (9)$$

3.4 Energy and Entropy Generation in Expansion Valve

$$h_3 = h_4 \quad (10)$$

$$\dot{S}_{REV} = \dot{m}_R (s_4 - s_3) \quad (11)$$

3.5 Energy and Entropy Generation in Evaporator

$$\dot{Q}_E = \dot{m}_R (h_5 - h_4) = \dot{m}_{wev} (h_{16} - h_{15}) \quad (12)$$

$$\dot{S}_E = \dot{m}_R (s_5 - s_4) + \dot{m}_{wev} (s_{16} - s_{15}) \quad (13)$$

3.6 Energy and Entropy Generation in Absorber

$$\dot{Q}_A = \dot{m}_R [(f-1) h_{12} - f h_7 + h_6] = \dot{m}_{wab} (h_{18} - h_{17}) \quad (14)$$

$$\dot{S}_A = \dot{m}_R [f s_7 - s_6 - (f-1) s_{12}] + \dot{m}_{wab} (s_{18} - s_{17}) \quad (15)$$

The solution concentration in the absorber and generator is a function of temperature.

Volume : 3 | Issue : 10 | October 2014 • ISSN No 2277 - 8179

$$X_{ws}=X_7=X_8=X_9=\frac{49.04+1.125t_A-t_E}{134.64+0.47t_A} \quad (16)$$

$$X_{ss}=X_{10}=X_{11}=X_{12}=\frac{49.04+1.125t_G-t_C}{134.64+0.47t_G} \quad (17)$$

3.7 Energy and Entropy Generation in Solution Heat Exchanger

The effectiveness of SHE is given by:

$$\varepsilon_{SHE}=\frac{t_G-t_{11}}{t_G-t_A} \quad (18)$$

Temperature at state point 10 is given by,

$$t_{10}=t_A+\left[\frac{\varepsilon_{SHE}X_8c_{11}(t_G-t_A)}{X_{11}c_8}\right] \quad (19)$$

$$\dot{Q}_{SHE}=\dot{m}_R.(f-1)(h_{10}-h_{11})=\dot{m}_R f(h_9-h_8) \quad \dot{S}_{SHE}=\dot{m}_R(f-1)(s_{10}-s_{11})+\dot{m}_R f(s_9-s_8) \quad (20) \text{ and } (21)$$

3.8 Thermal Analysis of Evacuated Tube Solar Collector:

The analysis of heat transfer is as the work by siddharth,shobhit,R.Udaykumar and Muhammad (2011)

The entropy generated in the evacuated tube solar collector is given by:

$$\dot{S}_{collector}=\dot{m}_{mhw}c_{p\,mhw}\left(\ln\frac{t_o}{t_i}-\frac{t_o-t_i}{t_{atm}}\right)+\dot{Q}_{in}\left(\frac{1}{t_a}-\frac{1}{t_s}\right) \quad (22)$$

3.9 Total Entropy Generation in the system

$$\dot{S}_{total}=\sum_{j=1}^{N}\dot{S}_{total}=\dot{S}_{collector}+\dot{S}_G+\dot{S}_C+\dot{S}_A+\dot{S}_E+\dot{S}_{RHE}+\dot{S}_{SHE}+\dot{S}_{REV} \quad (23)$$

4. Optimization strategy

MATLAB code is generated. The upper limit and lower limit of the generator temperature is set in genetic algorithm. Constrains are set in the GA tool .Entropy is set as the function of mass flow rate of hot water and t_g. The optimization is carried out under following conditions.

t_A = 38 °C t_E = 4 °C T_C = 38 °C

$\varepsilon_{SHE}=\varepsilon_{RHE}$ = 0.5 η_p = 0.9

5. Result and Discussion

The optimized value of the temperature is 93.2 °C and $\dot{m}_{mhw}$ is 0.55 kg/s. The objective function value at this point is 78.84870 kW/K.(Fig 5.1)

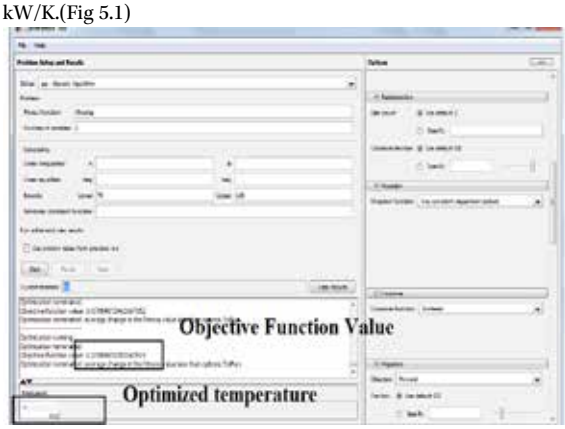

Fig 5.1 GA result of optimization of Generator temperature and $\dot{m}_{mhw}$.

Moreover at very high t_g, the strong solution becomes practically impossible because at elevated concentration (over70%) Li-Br aqueous solution losses its solubility. More entropy is generated for lower t_E and higher t_C. (Figure 5.3 & 5.4)

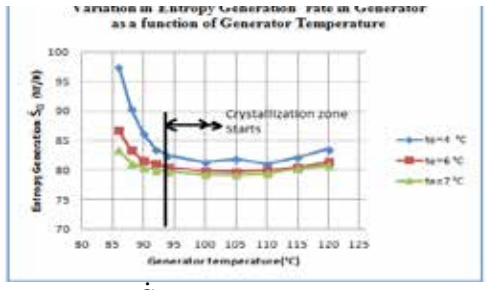

Fig5.2 Graph: $\dot{S}_G$ with t_g for different value of t_E

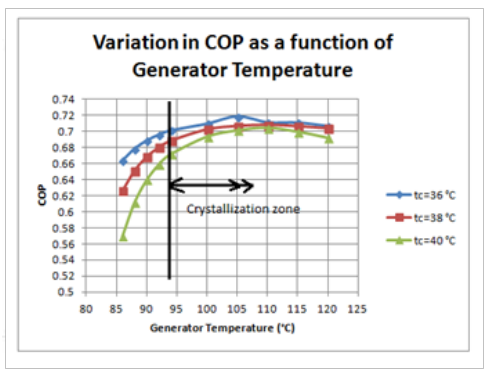

Fig 5.3 Graph: $\dot{S}_G$ Vs t_g for different value of t_C

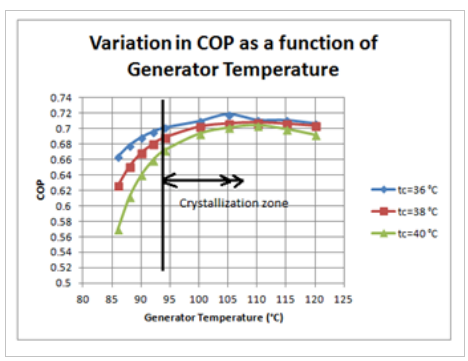

Fig 5.4 Graph: COP with generator temp. For different value of t_C

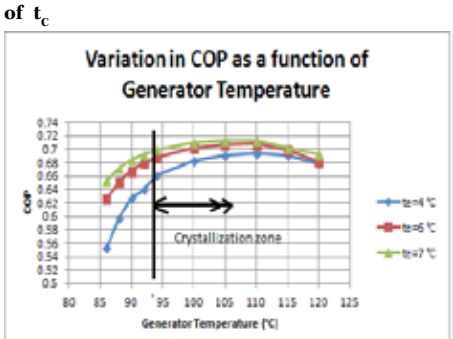

Fig 5.5 Graph: COP with generator temp. for different value of t_E

The calculated other parameters fen optimized generator temperature and mass flow rate of hot water.

Parameter	Value
Optimized Generator Temperature temperature	93.2 °C
Optimized hot water mass flow rate	0.55 kg/s
Circulation ratio (f)	10.3998
COP	0.6565
Surface Area of Generator	0.243 m^2
Collector Absorber Area	16.9754 m^2

Table 5.1 Calculated optimized variables.

6. Conclusion

As a result of the present work following conclusions can be made:

1. Generator has highest contribution in entropy generation of the system hence optimizing generator parameter with a view of reducing entropy is thermodynamically more important.

2. The optimized generator temperature of the system under specified condition is 93.2 °C. Above this temperature crystallization of Li-Br water solution starts. Performance parameter is also highest at this temperature.

3. Condenser and evaporator temperature has effect on entropy generation and eventually on COP. With increase in temperature in condenser and decrease in evaporator temperature, entropy generation increases.

REFERENCE

(1) Siddharth Arora, Shobhit Chitkara, R. Udayakumar and Muhammad Ali., Thermal analysis of evacuated solar tube collectors., Journal of Petroleum and Gas Engineering Vol. 2(4), pp. 74-82, April 2011.

(2) Bejan A.1982.Entropy Generation through Heat and Fluid Flow Wiley, New York.