Volume : 3 | Issue : 10 | October 2014 • ISSN No 2277 - 8179

Research Paper

Structural And Modal Analysis of A Marine Engine Helical Gear

Engineering

KEYWORDS : gear, marine engine, weight,design,analysis

K.Irshad	Pg Student:MITS,Madanapalle
M.Vamsi Krishna	Assistant Prof.in the Dept.of MechanicalEngg. MITS,Madanapalle
Sreenivasulu Bejawada	Assistant Prof.in the Dept.of MechanicalEngg. MITS,Madanapalle

ABSTRACT

A helical gear is a most widely used power transmission component and is also used in marine engine propeller shaft. Usually this helical gear is manufactured by mild steel and it is observed that it was failure due to more weight as well as the properties of the material. The present work deals with the designing of the helical gear of marine engine propeller shaft by the materials mild steel and aluminum alloys 7475 and 6061.The gear's Parametric 3D modeling is done in CATIA V5 R12 and analysis is done in Ansys14.

INTRODUCTION

Gears are defined by the toothed members which transmits the power/motion between two shafts by arranging them without any slip. So thereby, gear drives are also called positive drives(4). In any of pair of gears, the minor one is called as pinion and the major one is called as gear of no consequence of which is driving the other(5).

When pinion is the driver, pinion results in step down drive and in which the harvest speed decreases as the torque increases(1). On the other hand, when the gear is the driver, it will possess in step up drive as in which the output speed increases subsequently the torque decreases(7).

CLASSIFICATION OF GEARS

Gears are categorized based on the shape of the tooth pair and are described as follows

SPUR GEARS

This is the most recognized way of style for gear. Spur Gears are used exclusively to transfer rotary motion among parallel shafts, while preserving uniform speed and torque(8). The involute tooth form, organism the simplest to generate, permits high industrialized tolerances to be achieved(4).

HELICAL GEARS

These are similar to spur gears with the difference that the teeth are cut at an angle to the axis of the shaft (helix angle). This helix cut creates a wider contact area provides higher strengths and torques to be required. Even though helical gear sets operate quieter and also smoother than the spur gears, helical gears are slightly less efficient(8). Helical gears can run on parallel shafts or may be offset as much as the helix angle will permit. Axial thrust (parallel to axis) loads are developed during operating condition and must be considered when selecting the bearings and their mounting arrangements(6).

BEVEL GEARS

These gears will be used utterly to transmit rotary motion between two interconnecting shafts which are concentric in arrangement. Though commonly perceived in right angle drives, bevel gears can be cut to drive at any angle(9). A cross section of the gear tooth exposes a profile similar to a spur gear(8). Conversely, as the tooth is generated. The cross section reductions the closer it gets to the center of the gear. Bevel gear set will turn out axial thrust loads which must be compensated for when selection of bearings and designing the mounting equipment. Bevel gears of 1:1 ratio are treated to be as miter gears(9).

WORM GEARS

The Best grade choice of gearing when high drive reduction is required is Worm Wheels resemble helical gears with the accumulation of a throat sever into the outer diameter of wheel(3). The throat authorize the worm wheel to be fully covering the threads of the worm.

A inimitable feature of Worm and Wheel assemblies are their capacity to rule out back driving(9). Convinced pitches and leads of the worm will not authorize the caterpillar wheel to drive the worm. Worm and Worm Wheel arrangement must be mounted at right angles on an intersecting shafts(2).

NOMENCLATURE OF THE GEAR

Spur gears are also called as prompt gears, prompt gears are used to transmit rotary motion between parallel shafts(8). These are usually cylindrical in shape and its teeth are straight and parallel to the axis of rotating shaft. In a couple of gears, the major one is often called the GEAR and, the minor one is called the PINION

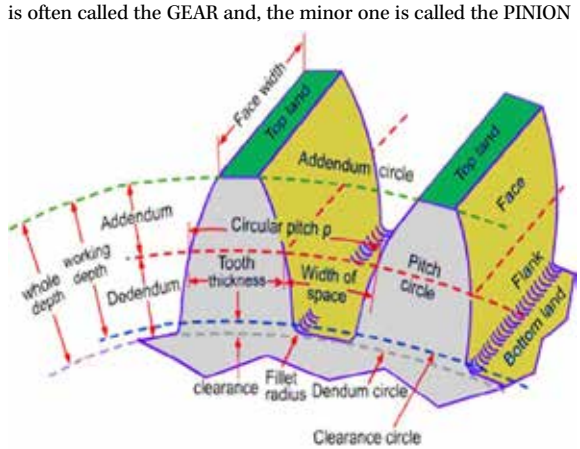

Figure.1. Gear Nomenclature

MODELLING OF HELICAL GEAR USING CATIA

CATIA stand for Computer Aided Three Dimensional Interactive Application. It is a product modeling software can be custom-made via Application Programming Interfaces (API). CATIA V5 features are parametric solid/surface-based wrap up which uses NURBS as the interior surface representation and has quite a lot of workbenches that make available KBE support(1).

The most widely used software in modeling now a days is CATIA. It can be appreciable to be considered as an User friendly software and capable of presenting the existence on any platform which is related to computer part of programming the commands(1). There by accuracy of the software for drafting is almost reaches to preferable real time values. Though there are so many versions in CATIA the V5 version has been used for present work(2).

Volume : 3 | Issue : 10 | October 2014 • ISSN No 2277 - 8179

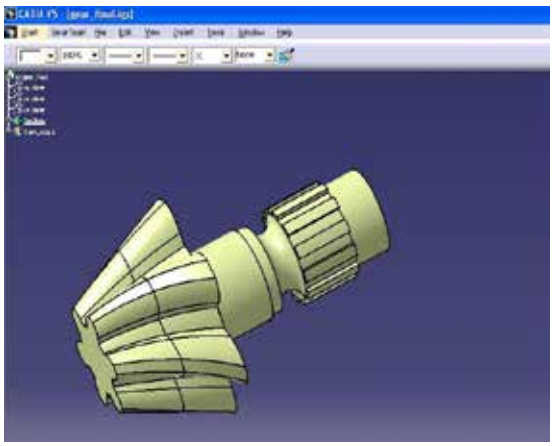

Figure. 2. Helical Gear Model

FINITE ELEMENT ANALYSIS

Finite Element structural analysis is a technique of predicting the performance of a real structure under precise load and displacement conditions(2). The finite element modeling is generality of the disarticulation or matrix method of structural analysis to two as well as three-dimensional tribulations(1). The fundamental concept of FEM is that configuration to be analyzed and is considered to be a collection of discrete pieces called "Elements" in which that are connected together at a finite number of points or nodes. The finite element method is a geometrically simplify demonstration of a small part of the physical structure(2). Discretising the structure needs the experience and complete appreciative of the behavior of the structure and can perform like a beam, truss, plate, and shell.

STRUCTURAL ANALYSIS

MILD STEEL

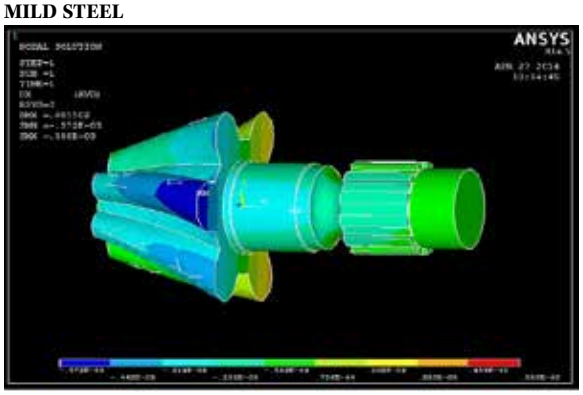

Figure.3. Displacement Vector Sum

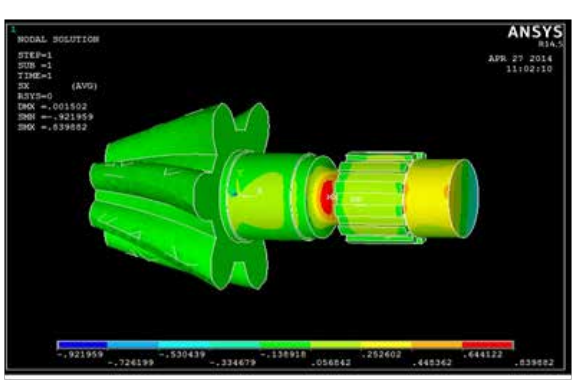

Figure.4. Nodal Stress

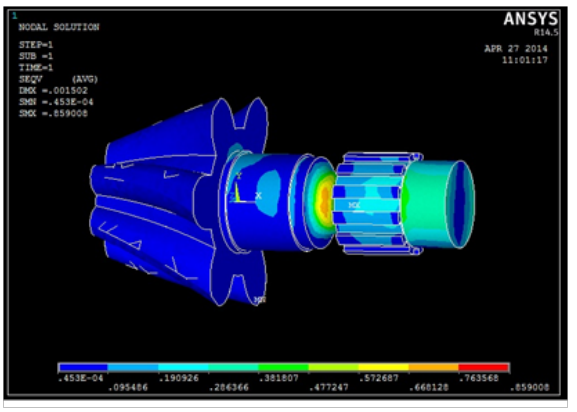

Figure.5. Vonmisses stresses AL- 7475

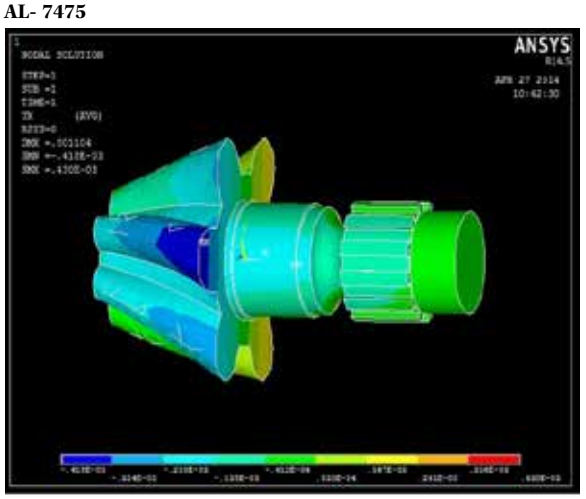

Figure.6. Displacement Vector Sum

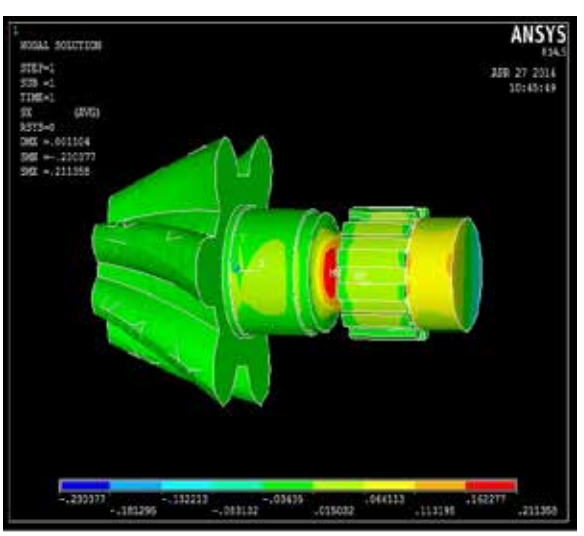

Figure.7. Nodal Stress

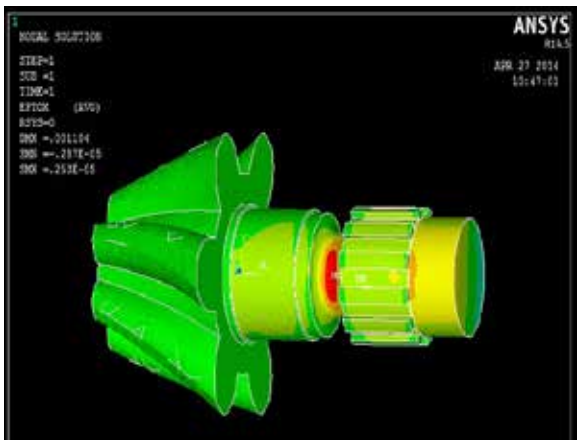

Figure.8. Nodal Strain
AL- 6061

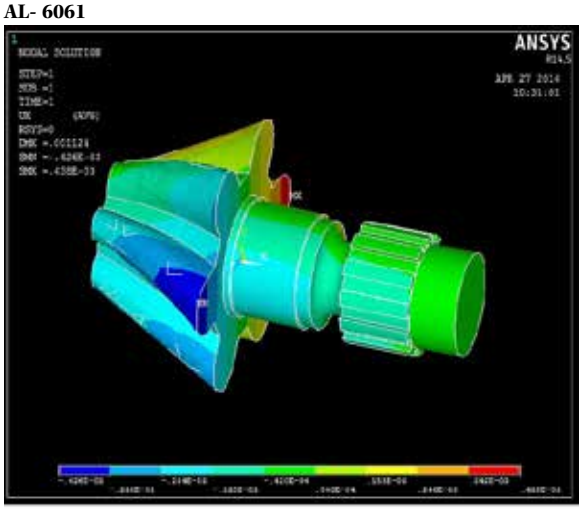

Figure.9. Displacement Vector Sum

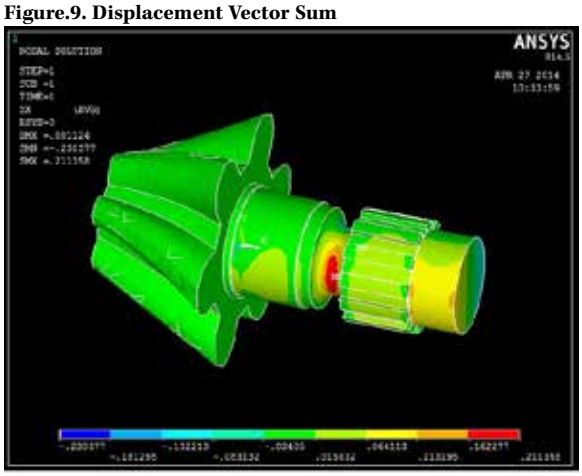

Figure.10. Nodal Stress

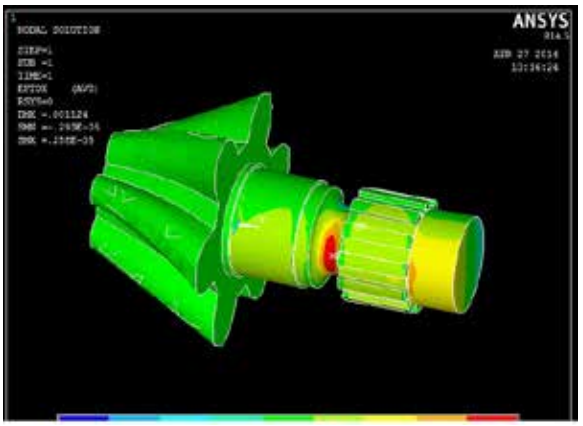

Figure.11. Nodal Strain

MODEL ANALYSIS
MILD STEEL

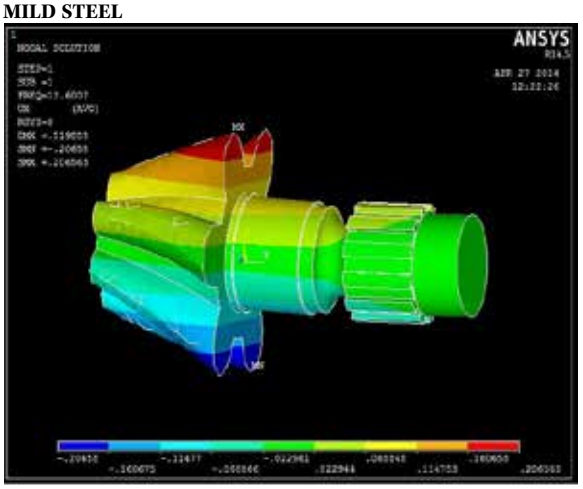

Figure.12. Displacement in X-Direction
AL- 7475

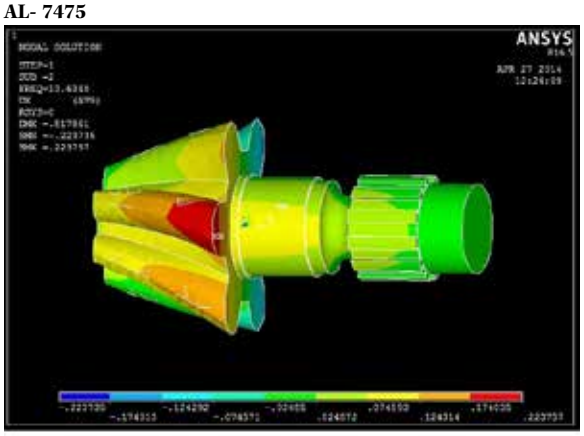

Figure.13. Displacement in X-Direction
AL- 6061

Volume : 3 | Issue : 10 | October 2014 • ISSN No 2277 - 8179

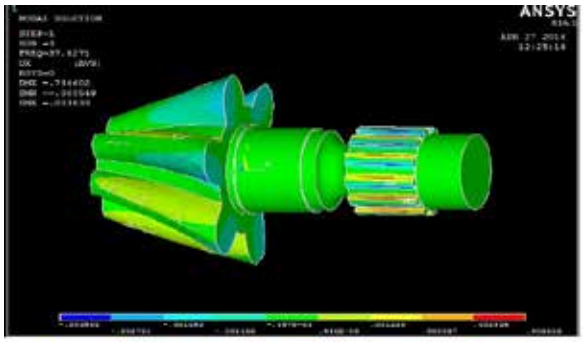

Figure.14. Displacement in X-Direction

RESULTS & DISCUSSIONS

The present used material for helical gears is Mild Steel. In this project, gear is designed using two different aluminum alloys 7475 and 6061. Theoretical calculations and analysis are done for helical gear using Mild Steel, Aluminum alloys 7475 and 6061. While using Mild Steel for helical gears, the weight is more. By replacing with aluminum alloys, the weight is reduced. Parametric 3D modeling is done in CATIA V5 R12 and analysis is done in Ansys.

Structural Analysis Values

	Aluminum alloy 6061	Aluminum alloy 7475	Mild steel
Displacement (mm)	0.001124	0.001104	0.001502
Stress (N/mm^2)	0.211358	0.21358	0.839882
Strain	0.258e^{-05}	0.253e^{-05}	0.351e^{-05}

Model Analysis Values

		Aluminum alloy 6061	Aluminum alloy 7475	Mild steel
Mode 1	Frequency (hz)	13.3938	13.2521	13.6007
	Displacement (mm)	0.88745	0.86657	0.519888
Mode 2	Frequency (hz)	13.4285	13.2865	13.6348
	Displacement (mm)	0.884064	0.86658	0.517861
Mode 3	Frequency (hz)	36.1991	35.8162	37.5271
	Displacement (mm)	1.25406	1.2292	0.734602
Mode 4	Frequency (hz)	88.9964	88.055	90.6848
	Displacement (mm)	1.07786	1.05655	0.629319
Mode 5	Frequency (hz)	89.161	88.2179	90.849
	Displacement (mm)	1.12695	1.10465	0.661105

CONCLUSION

In this project, static-structural analysis and modal analysis is done on a high speed helical gear which is used in marine engine's propeller shaft, have been performed. The dimensions of the model have been arrived at by theoretical methods.

The present used material for helical gears is Mild Steel. In this project, gear is designed using two different aluminum alloys 7475 and 6061. Theoretical calculations and analysis are done for helical gear using Mild Steel, Aluminum alloys 7475 and 6061. While using Mild Steel for helical gears, the weight is more. By replacing with aluminum alloys, the weight is reduced. Parametric 3D modeling is done in CATIA V5 R12 and analysis is done in Ansys.

By observing the analysis results, the stress values are less by using all the 3 materials than their respective yield stress values. So using aluminum alloys is better for helical gear used in high speed marine engines. In aluminum alloys, using aluminum alloy 6061 is better as its weight is less than aluminum alloy 7475.

REFERENCE

[1] Li. S," Gear Contact Model and Loaded Tooth Contact Analysis of a Three-Dimensional Thin-Rimmed Gear" Journal of Mechanical Design, Vol. 124, 2002, pp. 511-517. | [2] Kharazi, Umrani. M, "A deformable body dynamic analysis of planetary gears with thin rims", Journal of sound and vibration, pp: 752-768. | [3] Wang, J, "Survey of Nonlinear Vibration of Gear Transmission Systems", Applied mechanics vol 56, No 3. 2003. | [4] Yoo Su-jin Park, Wan-suk, "Deformation overlap in the design of spur and helical gear pair", Finite Element in Analysis and Design, pp:1316-1378. | [5] Rufang, Lin, Tengjiao, "A finite element method for 3D static and dynamic contact/impact analysis of gear drives", Computer methods in applied mechanics and Engineering. | [6] M. S. Hebbal, V. B. Math, B. G. Sheeparamatti," A Study on Reducing the Root Fillet Stress in helical Gear Using Internal Stress Relieving Feature of Different Shapes" International Journal of Recent Trends in Engineering, Vol. 1, No. 5, May 2009. | [7] Hedrih.K, Nikolic-stanojevic.v, "A model of gear transmission fractional order system dynamics", Mathematical problems in Engineering ISSN 1024-123. | [8] Tuan Nguyen, Hsiang H. Lin, "Compact Design for Non-Standard Spur Gears", Journal of mechanical, aero space and industrial engineering – Vol 2, Issue 1, 2011. |