Volume : 2 | Issue : 11 | Nov 2013 • ISSN No 2277 - 8160

Research Paper Engineering

Alive Human Detection Robot Using Image Acquisition and Processing

SatheeshKumar. V 2nd M.Tech Robotics, School of Mechanical Engineering, SRM University, Kancheepuram Dt,pincode- 603 203.

Vasanthkumar. ch 2nd M.Tech Robotics, School Of Mechanical Engineering, SRM University- Kancheepuram Dt,pincode- 603 203.

ABSTRACT

In this paper, a new approach for detecting alive humans in destructed environments using an autonomous robot is proposed. Human detection in an unmanned area can be done only by an automated system. Alive human body detection system proposed a monitoring system using ultrasonic sensors and camera to record, transmit and analyze conditions of human body. The task of identify human being in rescue operations is difficult for the robotic agent but it is simple for the human agent. In order to detect a human body, an autonomous robot must be equipped with a specific set of sensors that provide information aboutthe presence of a person in the environment around. This work describes an autonomous robot for rescue operations. The proposed system uses an ultrasonic sensor in order to detect the existence of living humans and a low-cost camera in order to acquire a video of the scene as needed. Additional, other sensors include PIR and CO2. metal detector works as bomb sensor to detect the presence of bomb in Warfield and in rescue operations. Having detected a blockages, the ultrasonic sensor Triggers the camera to show live scene. The video is then displayed on the screen on PC or LAPTOP and processed through MATLAB. This approach requires a relatively small number of data to be acquired and processed during the rescue operation. This way, the real-time cost ofprocessing and data transmission is considerably reduced. This system has the potential to achieve high performance in detecting alive humans in devastated environments relatively quickly and cost effectively. The detection depending on a number of factors such as the body position and the light intensity of the scene. Results show that the system provides an efficient way to track human motion. The aim of this article is to present our experience with various sensors designed and developed.Robotics, ultrasonic sensor, Urban Search and Rescue.

KEYWORDS :

I. INTRODUCTION

Disasters can disrupt economic and social balance of the society. Natural disasters occur frequently nowadays. Many human beings are victims of such occurrences. Because of high rise buildings and other manmade structures urban and industrial areas can be consider to be more susceptible to disasters. These disasters can be categorized into natural and human induced disasters. Natural disasters include floods, storms, cyclones, bushfires and earthquakes where as besides natural disasters, the urban environment is prone to human induced disasters such as transportation accidents, industrial accidents and major fires.

During such calamities, especially disasters, in order to prevent loss of life and property various essential services (like fire brigades, medical and paramedical personnel, police) are deployed. Some lose their lives because of not being treated at time. According to the field of Urban Search and Rescue (USAR), the probability of saving a victim is high within the first 48 hours of the rescue operation, after that, the probability becomes nearly zero. Generally, Rescue People cannot enter into some parts / places of the war field or in the earth quake affected areas. All of these tasks are performed mostly by human and trained dogs, often in very dangerous and risky situations. To avoid such losses, a robotic system can perform well for providing alert (detection) of human being. The main purpose of the robot is to detect alive human beings after the occurrence of natural calamities with the help of Ultrasonic sensor. The robot based system will sense the radiation of human being and condition the sensed signal to communicate to the control section of this robot. Based on the responded commands the robot will react upon. The rescuer may become a victim who needs to be rescued. This is why since some years mobile robots have been proposed to help them and to perform tasks that neither human, dogs nor existing tools can do. For this project, we will focus only on robots which will work in a disaster environment of manmade. The proposed system uses an ultrasonic sensor in order to detect the existence of living humans and a low- cost camera in order to capture video of the scene as needed. Having detected a sign of a blockages, the ultrasonic sensor triggers a camera to capture a video of the scene. The simulated robot is assumed to have the capability to determine its current location in real-time, to wirelessly communicate with the rescue team, and to locally store the status and location information about the trapped victims in case the wireless communications link is temporarily disconnected. While detecting human being, there may be some obstacle on the way of robot. In order to identify the obstacle and to have an alternate path to perform its defined task an ultrasonic detection is used which effectively fulfills this operation. Traditionally, equipped robots faced a lot of problems:

i) A very high communication cost was incurred due to the large number of transmitted images to the operator.
ii) More than 25% of the communications between Wireless robot and the control unit was extremely noisy and therefore was useless. This eventually led to a loss of communication between the robots and the operator. As a result, the robots stopped working totally.
iii) A very high processing cost is also incurred by the Capturing, storing, and transmitting a large number of images.
iv) Third, there was a continuous need for illumination due to the dark nature of these environments. This requires a relatively large power supply, which is not feasible in such situations.

II. RELATED WORK

In this section, a brief discussion of some of the related work is presented; focusing on the used approach and its advantages and disadvantages. Remote Operated and Controlled Hexapod (ROACH): [12] ROACH is a six legged design that provides significant advantages in mobility over wheeled and tracked designs. It is equipped with predefined walking gaits, cameras which transmit live audio and videos of the disaster site, as well as information about locations of objects with respect to the robot's position to the interface on the laptop. Kohga: University of

Tokyo - The most complicated task for most of the USAR robots has been working on a rough terrain. Specialized robots have been designed for these types of environments such as KOHGA the snake like robot. The robot is constructed by connecting multiple crawler vehicles serially, resulting in a long and thin structure so that it can enter narrow space. *Quality* work has been done in the field of robotics. These robots came into existence in the early 21st century but since then enormous improvements have been made in the concept, design owing to which their capabilities have improved significantly. Various rescue robots have been developed and some of these are – CRASAR (Centre for Robot-Assisted Search and Rescue): University of South Florida. This robot[10] was used for

first time in real conditions on 11th September 2001 in the World Trade Centre disaster. Different sensors like millimetre wave radar for measuring distance, a colour CCD camera for vision and a forward-looking infrared camera for the human heat detection are used in it. Burion [6] presented a project that aims to provide a sensor suite for human detection for the USAR robots. This study evaluated several types of sensors for detecting humans such as pyroelectric sensor, USB camera, microphone, and IR camera. The pyroelectric sensor was used to detect the human body radiation, but its limitation was its binary output. The USB camera was used for motion detection, but its limitation was its sensitivity to changes in light intensity. The microphone was used for long duration and high amplitude sound detection, but it was severely affected by noise. Lastly, the IR camera was used to detect humans by their heat image, but it was affected by other nearby hot objects. The main idea was to detect a change in the image scene by checking the values of the pixels. Several images for the scene were acquired and subtracted from each other to discover if a motion has occurred. The used technique was fairly efficient in detecting the victims. However, the robot was not fully autonomous and was dependent on the operator

. In this paper search and rescue environment is described, the applications of robots in urban and rescue, an outline of robotic competitions in simulating a real rescue environment is described. Bahadori [16] presents an analysis of techniques that ave been studied in the recent years for human body detection (HBD) via visual information. The focus of thiswork is on developing image processing routines for autonomous robots operating for detecting victims in rescue environments. The paper both discusses problems arising in human body detection from visual information and describes the methods that are more adequate to be applied in a rescue scenario. Finally, some preliminary experiments for such methods in recognizing rescue victims are reported. Pissokas [1] describe the social impact of urban devastations has given rise to the field of Urban Search and Rescue Robotics. The aim of this article is to present our experience and experimental results with various sensors designed and developed.

III. BLOCK DIAGRAM

As shown in fig 1. This system consists of transmitter and receiver unit. Furthermore transmitter unit consist of rotational unit which has a specific set of sensors mount on it and a microcontroller. Receiver unit consist of camera which gets activated and starts capturing images as soon as controller detects human being and pir sensor gets activated. Once pir sensor detects human radiation it activates carbondi oxide sensor figure shows Human Body Detection System Based on Sensors

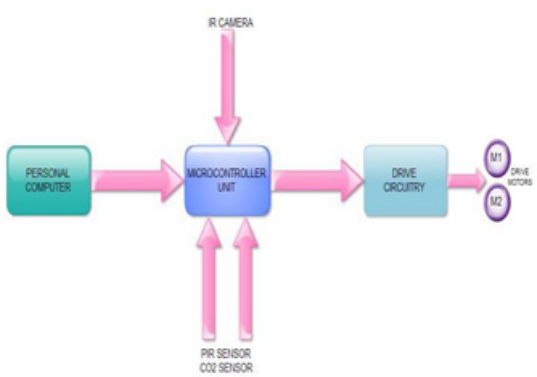

IV. HARDWARE RESULTS

In order to simulate the robot, a laptop used A Robot is equipped with following sensors and camera:

i) An ultrasonic sensor to detect human motion and obstacles come in the way of Robot.
ii) PIR sensor and CO2 sensor to sense radiation and presence of carbondioxide and display them on user interface.
iv) Camera to record data and the recorded data is processed using MATLAB programming installed in the computer.

V. SOLIDWORKS MODEL OF A ROBOT

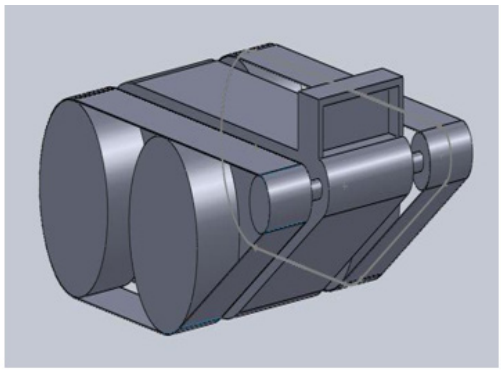

VI.FLOWCHART

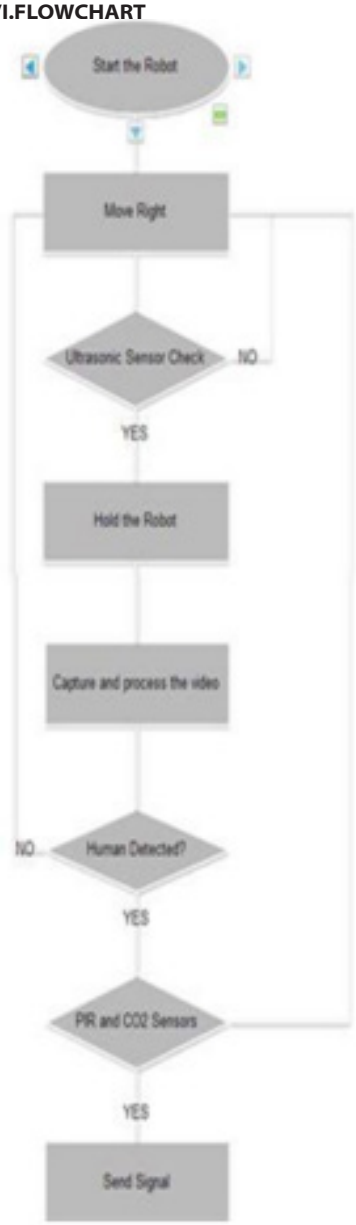

VII. APPLICATIONS

In military applications to detect the presence of human being.
In Rescue operations where human reach is not possible.
In Warfield affected areas, to detect the presence of bomb.

VIII. CONCLUSION

The goal of this research was to provide a low cost rescue robot for

human detection in a disaster environment. Though, the existing Urban Search and Rescue Robots are equipped with various sensors, but the problem with them is the cost. The sensors used in the development of this project are easily available and cost effective. In this paper, a new method for detecting surviving humans in destructed environments using simulated autonomous robot is proposed. The robot uses two levels of sensing in order to achieve higher cost-effectiveness in the detecting process in terms of the actual cost of equipment, the processing cost, the communication cost, the storage cost, and the power cost. The first level is an ultrasonic sensor that is used as the primary sensor in order to detect the existence of living humans in a scene. The second level is a human body shape sensor. This level uses low-cost web camera in order to confirm the existence of a human shape. The robot is assumed to be equipped with a simple Temperature and bomb sensor in order to detect fire in Rescue scenario and suspected metal respectively and a wireless communication link in order to communicate with the rescue team whenever a need arises.

IX. FUTURE SCOPE

Since the system developed is a low cost system therefore it has a wide future scope. Though many systems with a wide range of sensors have been developed, but there are many problems faced by them such as cost, size, environment difficulties etc.

REFERENCES

[1]Alive Human Body Detection System Using | An Autonomous Mobile Rescue Robot | sandeep Bhatia ,raj kumar goel institute of techghaziabad (u.p) india | [2]Raposa: semi autonomous robot for rescue | operations | pedro lima, joao frazao, isabel rebeiro, rodrigo ventura institute for systems and robotics proceedings of the 2006 ieee/rsj international conference on intelligent robots and systems october 9 - 15, 2006, beijing, china | [3] Pissokas, John and Malcolm, Chris "Experiments with Sensors for Urban Search and Rescue Robots" Dept. of Computer Science, University of Essex an d Division of Informatics, | University of Edinburgh, Scotland UK, 2001.. | [4] Rufaida Shamroukh, Fahed Awad "Detection of surviving humans in destructed environments using a simulated autonomous robot" | IEEE Transaction, March 24-26, 2009. | [5] Carlos Marques, Pedro Lima, Rodrigo | Ventura "Semi-autonomous robot for rescue operations" Proceedings of the 2006 IEEE/RSJ International Conference on Intelligent Robots and Systems,October 9 - 15, 2006, Beijing, China. | [6] R. Fuksis, M. Greitans, E. Hermanis "Motion Analysis and Remote Control System using Pyroelectric Infrared Sensors" IEEE, 2008. No. | 6(86), PP. 69-72. | [7] Jean Schultz, Jill L. Drury, Holly A. Yanco | "Evaluation of Human-Robot Interaction Awareness in Search and Rescue" IEEE, 2004, PP. 2327-2332. | [8] Steve Burion "Human Detection for Robotic | Urban Search and Rescue" Info science database | of the publications and research reports. Technical Report, February, 2004. Record number 29999. | [9] Kun-Mu Chen, Yong Huang, Jianping Zhang and Adam Norman "Microwave Life-Detection | Systems for Searching Human Subjects Under | Earthquake Rubble or Behind Barrier" IEEE | Transactions, Biomedical Engineering, VOL. | 27, NO. 1, January 2000, PP. 105-114. | | [10] Binoy Shah and Howie Choset. "Survey on Urban Search and Rescue Robotics" Journal of the Robotics Society of Japan, Vol.22, No.5, Page.582-586, 2004. | [11] Greer, D., Kerrow, P. M., & Abrantes, J. "Robots in urban Search and Rescue Operations" Australasian Conference on Robotics and Automation, Auckland, 27-29 | November, 2002, PP. 25-30. | [12] Casper, J. "Human-Robot Interactions during the Robot-Assisted Urban Search and Rescue Response at the World Trade Center", IEEE, 2003, PP.367-385. | [13] Afak Sekmen, Ali S., Kawamura, Kazuhiko, and Wilkes, Mitch "An Application | of Passive Human–Robot Interaction: Human | Tracking Based on Attention Distraction" IEEE, Vol. 32, No. 2,march 2002, PP. 248-259. | [14] Amerada, T., Yams, T., Igarashit, H., & | Matsunos, F. "Development of the Snake-like | Rescue Robot KOHGA" IEEE, 2004, PP. 5081- | 5086. | [15] Ying-Wen Bai, Li-Sih Shen and Zong-Han | Li "Design and Implementation of an Embedded | Home Surveillance System by Use of Multiple Ultrasonic Sensors" IEEE Transactions onConsumer Electronics, Vol. 56, No. 1, February 2010, PP. 119-124. | [16] Kai-Rui Zhao, Xin-Min Wang, Van Li, and | Xiang Yu, "A Lifedetection System for Special | Rescuing Robots" IEEE, 2006. | [17] Miyama, S., Imai, M. & Anzai, Y. (2003). "Rescue Robot under Disaster Situation: Position Acquisition with Omni-directional Sensor", in Proceedings of the 2003 IEEERSJ Int. Conference on Intelligent Robots and Systems, Las Vegas, Nevada, October. | [18] Bahadori, Shahram., Iocchi, Luca. "Human | Body Detection in the RoboCup Rescue | Scenario" Department of informatics, Rome | Italy. | [19] Roger, B., Hong, T., Madhavan, R., & Weiss, B, "3D Range Imaging for Urban Search and Rescue Robotics Research", in Proceedings of the 2005 IEEE, International Workshop on Safety, Security and Rescue Robotics, Japan, PP. | 164-169, June 2005. | [20] Hong liu, Ning dong, Hongbin zha "Omni- directional Vision based Human Motion | Detection for Autonomous Mobile Robots" | IEEE, 2006. | | [21] Song, Byunghun., Choi , Haksoo and Lee, Su, Hyung, "Surveillance Tracking System Using Passive Infrared Motion Sensors in Wireless Sensor aNetwork" IEEE, PP. 463-816. |