Volume : 3 | Issue : 4 | April 2014 • ISSN No 2277 - 8160

Research Paper Engineering

An Introduction and Costing of a Biomass/Wind/PV Hybrid Energy System for Electricity Micro-Generation to Domestic Buildings in Armidale NSW, Australia

Yasser Maklad

Civil and Environmental Engineering Discipline, Environmental and Rural, Science School, University of New England.

ABSTRACT

In this study, a hybrid energy system consisting of biomass, wind, solar photovoltaic (SPV), and battery is proposed. This paper discussed and determined the optimization process of sizing a hybrid renewable energy system designed for urban residential buildings in Armidale NSW, Australia. The considered renewable energy system comprises of solar photovoltaic (PV) system, wind turbines and biomass gasifier(s) small scale or micro-scale, thus it is a green sustainable system compared with already existing in use conventional traditional electricity generation based on fossil fuel, mainly coal burning which is definitely neither green nor sustainable.

This proposed alternative renewable energy systems includes battery racks as storage device. Software called HOMER software developed by the National Renewable Energy USA utilized for the simulation and evaluation purposes.

The optimisation process depends on a very common economic analysis which is the net present cost (NPC) analysis, meaning that the system of the highest energy production, the most optimum efficiency and the least NPC through the energy

Conclusions and recommendations are provided considering the residential buildings occupants' number and relevant electrical consumption with proposed renewable energy wind, solar PV and biomass combinations.

KEYWORDS : Solar PV energy, Wind energy, micro-scale energy generation, hybrid energy system, Armidale NSW, regional/rural Australia.

1. Introduction

A growing interest in renewable energy resources has been observed for several years, due to their pollution-free nature, availability all over the world, and continuity.

It goes without saying that the implementation of any energy system either renewable of nonrenewable will mainly depend on the feasibility of such a system. Regarding renewable energy systems, feasibility would cover many aspects starting with availability, passing with reliability in order to make sure of fulfilling efficiently the energy/electrical required demand either totally or partially, constructability in order to make sure that it is such renewable energy systems are constructable to new or existing buildings and ending with the economic feasibility in order to make sure that the renewable energy system is either paying back for its expenses or even making money through the project life cycle. Apparently studying the feasibility is a crucial factor earlier to taking any steps towards utilizing a renewable energy system.

Renewable energy systems are typical energy alternative as they are inexhaustible, inexpensive and no carbon emission-free sources which ensure the sustainability and sustainable developments topics.

Costs associated with fossil fuel electricity production are extremely high compared with small/micro-scale renewable energy. Fossil fuel electricity production technique would involve huge generation (burning) costs, transmission cost for hundreds of thousands of kilometers of either buried cables or suspended cables on towers, maintenance costs, in addition to the cost of losing power in the transmission lines due to distance and conductors/carrier aging. On the other hand, the localized small or micro scale renewable energies would almost eliminate all such cost related to fossil fuel electricity production especially for small population communities (Borowy and Salameh 1994). Small population communities are found generally in regional/rural Australia; Armidale town is selected for this study as typical regional/rural town in Australia.

In some cases, however, a single energy source system cannot provide a continuous source of energy due to the low availability during different seasons. In order to achieve the high-energy availability, it is necessary to oversize the rating of the generating system (e.g., surface of the photovoltaic array, rating of wind turbine). On the other hand it is possible to use hybrid system where two or more renewable energy sources are exploited (Tina et al. 2006).

Worldwide, Renewable energy has been stimulated to the fluctuating high prices of Oil, gases and coal, additionally the booming global concern of carbon pollution results from carbon emissions which added more thrust on such stimulation. However, practically assessing the expected boom and influence for renewable energies, it doesn't seem that it will be possible to eliminate the fossil fuel production totally; a more realistic view is to combine both fossil fuel and renewable energy sources to reach feasible systems' combination. Such systems are nominated as hybrid energy systems (Elhadidy and Shaahid 2004). Renewable energies can be combined with storage devices which are called battery racks which is useful in case of stand-alone systems utilized in urban areas, if the grid-connection option is not a feasible or a favorable option. Another combination option which does suit remote regional/rural areas is to include a backup device which is usually a diesel generator (Bagul *et al.* 1996).

Considering urban residential applications, both grid connected and stand alone are applicable and subject to the user needs and preferences, however, stand-alone systems are of much importance to remote regional/rural areas that do not have access to the electricity gird (Elhadidy and Shaahid 2004).

Nowadays, the stand-alone renewable generation scenario is a booming active research topic. More specifically, the hybrid system combining solar photovoltaic and wind turbines on a micro-scale electricity generation level which ranges from 0.5kW to 10 Kw which suits the either totally or partially the electricity demand of residential/domestic houses is proving feasibility whenever and wherever the wind and solar sources are available and adequate Castle et al. (1981). This is justified whereas Borowy and Salameh (1994) determined the optimum size of a PV array for stand-alone such systems, as well, Bagul *et al.* (1996) determined the optimum size of a PV array and associated storage sizing (battery rack) the same system, this has been established by utilising the three event probability density functions, then applying the graphical construction method to determine the optimum size of the PV array and wind turbine in a wind/PV hybrid system Markvart (1996) .

Hybrid renewable energy systems have great potential to provide higher quality and more reliable power to customers than a system based on a single resource. The renewable energy sources can complement each other. Hybrid renewable energy sources are mainly recognized for remote area power applications and are nowadays cost-effective where extension of grid supply is expensive (Deshmukh et al. 2006). There are many combinations of different alternative energy sources and storage devices to build a hybrid system. Hybrid PV systems are best suited to reduce dependence on fossil fuel by using available solar radiation. Hybrid PV systems include PV generator, diesel generator, and/or battery system. Battery storage increases the flexibility of system control and adds to overall system availability (Shaahid et al. 2003).

The HOMER energy modeling software is a powerful tool for designing and analyzing hybrid power systems, which contain a mix of conventional generators, combined heat and power, wind turbines, solar photovoltaic, batteries, fuel cells, hydropower, biomass and other inputs. It is currently used all over the world by tens of thousands of people. For either grid-tied or off-grid environments, HOMER helps determine how variable resources such as wind and solar can be optimally integrated into hybrid systems. Engineers and non-professionals alike use HOMER to run simulations of different energy systems, compare the results and get a realistic projection of their capital and operating expenses. HOMER determines the economic feasibility of a hybrid energy system optimizes the system design and allows users to really understand how hybrid renewable systems work. As distributed generation and renewable power projects continue to be the fastest growing segment of the energy industry, HOMER can serve utilities, telecoms, systems integrators, and many other types of project developers - to mitigate the financial risk of their hybrid power projects. HOMER Energy provides software, services, and an on-line community to the diverse group of people who are using HOMER to design hybrid systems (http://homerenergy.com/index.html).

Homer capabilities will be adjusted to suit this research needs which is evaluating mirco-scale hybrid (solar and wind) stand-alone electricity generation system with a battery rack.

Such simulation has been visited and explored by other researchers as it provides optimization under selected constraints. Such optimization has been done in several countries. For example, in Egypt whereas the economics of a renewable power system for sustainable desert agriculture in Egypt approached Kamel and Dahl (2005) and in Australia whereas the feasibility of stand-alone renewable energy systems for commercial applications in Australia investigated Dalton *et al.* (2008).

Feasibility of hybrid PV/wind energy systems strongly depends on solar radiation and wind energy potential available at the site (Elhadidy et al. 2004). Hybrid wind diesel for rural areas is proposed by Sharma et al. (2000). Also PV/wind system is proposed in the literature (Abdin et al. 1999). The design and structure of a hybrid energy system takes into account the types of renewable energy sources available locally (Ding et al. 2000).The present work discusses and determines the size optimization of hybrid solar PV and wind system to achieve a reliable and cost-effective sustainable supply to urban residential sector in Armidale NSW, Australia. The research deals with stand-alone system with battery storages. HOMER software has been explored for optimizing the sizing of the system.

In this study, a standalone hybrid energy system consisting of biomass gasifier based power generation, wind, and PV is proposed. A hybrid renewable energy system can either be stand-alone or grid-connected if a utility grid is available. For a stand-alone application, the system needs to have sufficient storage capacity to handle the power variations from the renewable energy sources involved. A system of this type can be considered as a micro- grid, which has its own generation sources and loads.

2. M ethodology

The objective of the proposed optimisation model is to optimise the availability of energy to the loads according to their level of priority. It is also proposed to maintain a fair level of energy storage in the battery to meet peak load demand (together with the gasifier, wind, and PV array), during low or no radiation periods and declining wind speed. The loads are classified as primary ad deferrable loads.

It is desired to minimise dumped energy, . The dumped energy is the excess energy, or energy cannot be utilised by the loads.

The objective function is to maximise

$$\sum_{t=1}^{24}\{\sum_i P_i \cdot I_j(t) - Q_{dump}(t)\} \quad (1)$$

with $I_i(t) \geq 0$

where

t is hour of a particular day $t = 1,2,\ldots 24$

i is load type primary and deferrable loads

P_i is demand of load i at time t in kW

$I_i(t)$ is the fraction of time t that the load i is supplied energy

Load Constraints

The energy distribution from the energy sources at period t to teach load i is given as where , , , are the energy supplied by the PV, wind,

$$Q_{P,i}(t) + Q_{W,i}(t) + Q_{G,i}(t) + Q_{B,i}(t) = I_i(t).P_i \quad (2)$$

gasifier, and battery, respectively.

PV Array Constraints

The sum of the energy supplied by the PV array to the loads and to the battery bank, in hour *t*, or is

The sum of the energy supplied by the PV array to the loads and to the battery bank, in hour t, or $E_P(t)$ is

$$Q_{P,B}(t) + \left(\Sigma_i Q_{p,i}(t)\right) + Q_{P,R}(t) = E_p(t) \quad (3)$$

where

$Q_{P,i}(t)$ is the energy supplied by PV array to the loads

$Q_{P,B}(t)$ in the energy supplied by PV array to the battery bank

$Q_{P,R}(t)$ is the energy dumped by PV array

Since energy generated by the system varies with insolation, therefore the available array energy $E_p(t)$ at any particular time is given by

$$E_p(t) = VS_{(t)} \quad (4)$$

Where

V is the capacity of PV array

$S_{(t)}$is the insolation index

Wind Energy System Constraints

The sum of energy supplied by the wind energy system to the loads and battery bank at hour t, or E_W is

$$Q_{W,B}(t) + \Sigma_i Q_{w,i}(t) + Q_{W,R}(t) = E_W(t) \quad (5)$$

where

$Q_{W,I}(t)$ is the energy supplied by the wind energy system

$Q_{W,B(t)}$ is the energy supplied by the wind energy system to the battery bank

$Q_{W,R}(t)$ is the dumped energy by the wind energy system

Gasifier Constraints

It is desired to run the generator at its optimum capacity to ensure longevity and efficiency. The sum of energy supplied by the gasifier based power generation system to the loads and battery bank, with a possibility of excesses:

$$Q_{G,B}(t) + \Sigma_i Q_{G,i}(t) + Q_{G,R}(t) = E_G(t)$$

where

$Q_{G,i}(t)$ is the energy supplied by the gasifier to the loads

$Q_{G,B}(t)$ is the energy supplied by the gasifier to the battery bank

$Q_{G,B}(t)$ is the dumped energy from the gasifier

$Q_{G,i}(t),\ Q_{G,B}(t),\ Q_{G,R} \geq 0$

Battery Bank Constraints

The battery bank serves as an energy source entity when discharging and a load when charging. The net energy balance to the battery determines its state of charge, (SOC). The state of charge is expressed as follows:

$$Q_B SOC(t) = Q_B SOC(t-1) + \left(Q_P(t) + Q_G(t) + Q_W(t)\right) - \Sigma_i Q_{B,i}(t) \quad (7)$$

where Q_B is the capacity of the battery bank.

The battery has to be protected against overcharging; therefore, the charge level at $(t-1)$ plus the influx of energy from the PV, wind, and gasifier at period $(t-1)$, (t) should not exceed the capacity of the battery.

Mathematically,

$$Q_B \geq Q_B SOC(t-1) + Q_P(t) + Q_G(t) + Q_W(t) \quad (8)$$

It is also necessary to guard the battery against excessive discharge. Therefore the SOC at any period t should be greater than a specified minimum $SOC.SOC_{min}$

$$1 \geq SOC(t) \geq SOC_{min} \quad (9)$$

Dumped Energy

From the above equations the total dumped energy in each hour *t* is

$$Q_{p,R(t)} + Q_{G,R}(t) + Q_{W,R}(t) = Q_{dump}(t) \quad (10)$$

Needless to mention that economics of utilising renewable energy systems is a major influential factor, thus the cost-benefit analysis is of high importance when considering sizing and optimization of any renewable energy system(s). In this article, simulation is applied for each possible probable system or combinations of systems (hybridising) in order to

maximize the system(s) production and efficiency and simultaneously in order to minimize the net present cost (NPC); meaning that the optimal system(s) configuration having the lowest NPC is seeked and targeted during the continuous optimization process (Deshmukh and Deshmukh 2008).

HOMER's main financial output is the total NPC of the examined system(s) configurations. NPC analysis is an appropriate gauge or scale for the purpose of economic comparison of different energy systems classification and configuration, the reason is that NPC balances widely divergent cost characteristics of renewable and non-renewable sources. As well, it explores and summarises all the relevant associated costs and revenues that occur within the lifetime of the energy project. Hence, it presents cash flow, savings, payback, funding sources, interest rates, gains and/or losses. NPC economic comparison method is considered as a method of globalism as it considers the initial capital, component replacement, maintenance and fuel cost. Obviously, the objective is crystal clear which is to examine and nominate a renewable energy system with the least NPC and the height energy production and efficiency (Dalton et al. 2008). The NPC can be expressed as expressed in equation (11):

$$NPC = \frac{Annztotal}{CFR(i,l)} \tag{11}$$

where Annztotal is the total annualised cost; CRF, the capital recovery factor; i, the average annualised interest rate announced by reserve Bank of Australia in the year of this study; and l, the lifetime of the project. The total annualised cost is the sum of the annualized costs of each renewable system's components and other annualized cost such as maintenance cost and replacement cost, by all means there is no fuel relevant running costs due to the nature of the energy sources which are wind and solar.

The annualised cost of a component is equal to the annual operating cost of the component in addition to its capital and replacement costs annualized over the project lifetime. The annualized capital cost of a component can be calculated as in equation (12):

$$Annzcap = {}_{cap,}CRF(i,l) \tag{12}$$

whereas *cap* is the capital cost of the component. *Annzrep* and *Annzom* are the annualized replacement cost and annualized operation and maintenance (O&M) cost. Other annualized cost, is the sum of other annualized capital cost, other annualized replacement cost and other annualized O&M cost. Other annualized cost influences the total NPC of each system and affects all of them by the same amount and is estimated as in equation (13):

$$CFR(i,l) = \frac{i(1+i))^1}{(1+i)^1-1} \tag{13}$$

Cost of energy (COE), which is the average cost per kilowatt-hour of electricity produced by the concerned system, is estimated as in equation (14)

$$COE = \frac{Annztotal}{l_{prim}+Idef} \tag{14}$$

whereas *lprim* is the primary load and *Idef* is the deferrable load on the system.

3. Inputs

Typically, hybrid renewable energy system components includes converters which can work either as a rectifier to transform alternating current (AC) into direct current (DC) or as an inverter to transform the DC into AC which is subject to the type of the fed load, battery storage racks in addition to the energy generator which is either a wind turbine which can either horizontal or vertical and the solar PV, and not to forget the cables and wires. Simulation process does require technical details of all the system's components and the electric load demand of the research area of study which will be presented in a subsequent section of this article, however, the study area details would include the electric load demand and the relevant electricity consumption profile pattern.

A typical proposed hybrid solar and wind system connection plan is illustrated in Figure 1 for initial reference. However, the optimum feasible solution will be decided after running HOMER iterations which will refine the system's components and sizes (Khan and Iqbal 2005).

The system economics all over the project life time is the dominating decision making parameter. Deepening on the output type of each generator it will be connected to either AC or DC bus, however, for simplification, it considered initially that wind turbines are connected to the AC bus, while the PV panels system and battery racks are connected to the DC bus. The PV and battery rack output electrical currents have to be converted to AC utilising a converter working as inverter to feed the AC load. The wind turbine output current has to be converted to DC utilising a converter working as a rectifier earlier to be connected it to the battery for charging the battery rack.

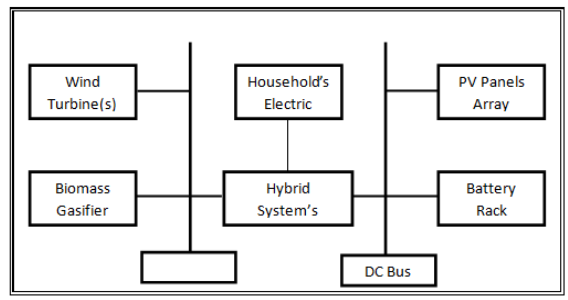

Figure 1. A Proposed Hybrid Energy System (Biomass/Solar/Sind) Configuration for Armidale NSW Residential Buildings

3.1 *Wind Energy Generation System*

Wind potentiality of an the study area is a crucial factor of decision taken to utilize wind turbines; wind potentiality is mainly expressed in wind speed magnitude. Generally, power generated from wind turbines are calculated as in equation (15) (Deshmukh and Deshmukh 2008)

$$P_w = -\frac{1}{2} C_p \lambda \rho A V^3 \tag{15}$$

whereas Cp is the coefficient of power generated, λ; the turbine blade's tip speed ratio; ρ, the air density in kg/m3 ; A, the swept area of wind turbine blades; and V, the wind speed.

Horizontal axis turbines are selected within HOMER to suit several load percentages, this will be discussed in a subsequent section in details, and however, the following financial data are gathered from market taking average costs in USD

Item No.	Turbine Rated Power	Capital Cost	O&M Annually	Replacement Cost
1	10 kW	13000	100	11000
2	5 kW	8000	50	7000
3	3 kW	3200	40	2700
4	1 kW	1200	30	1000

Table 1. Horizontal wind turbines average costing in USD per unit.
Source (Maklad, 2014b)

Replacement cost of turbines is less their capital cost since there will be no need to replace their mounting towers at the end of the project lifetime which is 25 years.

3.2. Solar PV System

Solar PV generated output power from the PV array depends on the direct diffused and reflected solar radiations in the area. The total solar radiation on an inclined surface can be estimated as in equation (16):

$$A_{batt} = \frac{N_{ban} V_{nom} Q_{nom} [1 - qmin/100](24h/d)}{L_{prim,ave}(1000Wh/KWh)} \tag{18}$$

where *I*b and *I*d are the direct normal and diffuse solar radiations and

Rb , *Rd* and *Rr* are the tilt factors for beam, diffuse and reflected parts of solar radiation, respectively.

Average Hourly power output from the PV system with array area *APV* on an average day of *j*th month when total solar radiation *IT* is incident on the PV surface and η is the PV system efficiency is given by (Deshmukh and Deshmukh 2008) as in equation (17)

$$P_{sj} = I_{Tj}\eta A_{pv} \qquad (17)$$

Based on current market prices, the capital cost of 1 kW array is USD 1600 and the replacement cost is USD 1000, whereas the O&M cost is USD 20 / year.

3.4. *Battery Storage And Converter*

Battery racks are utilized for the purpose of energy storage and to attain supply in the naturally intermittently supply of renewable energy sources and for peak load conditions. For the hybrid system, based on current market prices study a 7 kWh capital cost will be a 600 USD and the replacement cost will be 500 USD

It is worth mentioning that battery bank autonomy is an dominating parameter for the selection of battery size. It is defined as the ratio of the battery bank size to electric load. For a typical determination of battery bank autonomy, the following equation (18) is used:

$$A_{batt} = \frac{N_{ban} V_{nom} Q_{nom} [1 - qmin/100](24h/d)}{L_{prim,ave}(1000Wh/KWh)} \qquad (18)$$

where *A*batt is the number of batteries in the battery bank; *V*nom , the nominal voltage of a single battery [*V*]; *Q*nom , the nominal capacity of a single battery [Ah]; qmin , the minimum state of charge of the battery bank [%]; and Lprim,ave , the average primary load [kWh/d].

For converters, based on current market prices, a 1 kW converter size will cost USD 150 as a capital and a USD 125 for replacement.

4. Study Area details

The study area is a virtual single storey house with a living area, kitchen, toilet and laundry area, the study will deal with a one, two, three and four bedroom houses which are typically to be occupied by one, two, four and six occupants respectively. The typical relevant electrical loads are lighting, kitchen appliances (electrical fridge, electrical stove with oven, toaster), a television, two computers/ laptops, electric water heating (operating all the year) and electrical air conditioning to be operated in (almost 8 months/annually). A typical electrical consumption pattern for such a house in urban Armidale is seasonally categorized as shown in Table 2.

Season	Months	1 Occupant		2 Occupants		4 Occupants		6 Occupants	
		Total kWh	Avg. Daily kWh	Total kWh	Avg. Daily kWh	Total kWh	Avg. Daily kWh	Total kWh	Avg. Daily kWh
Winter	Jun–Jul-Aug	1700	18	2255	23	3160	32	4070	42
Spring	Sept-Oct-Nov	1150	13	1440	16	2020	22	2600	29
Summer	Dec-Jan-Feb	1300	15	1630	18	2280	25	2940	33
Autumn	Mar-Apr-May	1100	12	1380	15	1930	21	2490	27

Table 2. Extracted from AGL electricity provider in Australia data for Armidale NSW, Australia.

Generally, rural/regional Australia are rich of the following renewable energy sources such as solar, wind, geothermal, biomass and hydropower, however, further works needs to be done to prove the above findings feasibility against existing traditional electricity generation based on fossil fuel (Maklad, 2014c). Although, Armidale has several renewable energy sources such as biomass, geothermal, hydropower, solar and wind sources, this paper will focus on solar photovoltaic (PV) and Wind energy sources only. The reason for that those two sources are the most prominent renewable energy resources in the area of research. Armidale The potential of wind energy, that is, yearly wind profile for the study area has been obtained from the data of the nearest meteorological station (Armidale Airport Automatic Weather Station). These are the published data on the Australian bureau of meteorology website. As well, solar irradiance data were collected from the same source. Both wind and solar data are an average of 17 years of observations.

Analysing both wind and solar data for Armidale using HOMER, it showed adequacy of wind and solar availability over the year, meaning that a hybrid system of wind and solar can be applied. Figures 2, 3, 4 & 5 depicted average, maximum, mean and low values for wind speed and solar irradiance over the year.

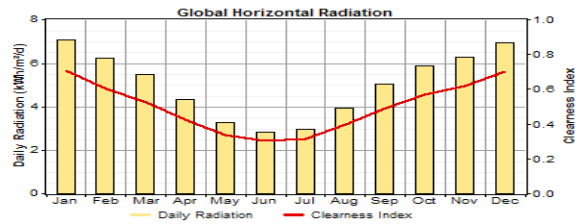

Figure 2. Average daily solar radiation and clearance index for Armidale NSW
Source (Maklad, 2014b)

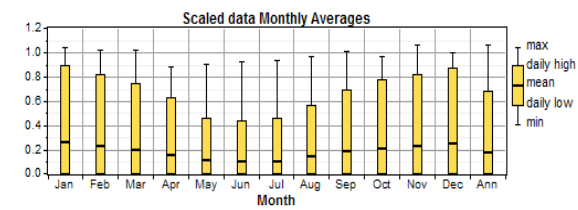

Figure 3. Maximum, Mean and low average daily solar radiation for Armidale NSW
Source (Maklad, 2014b)

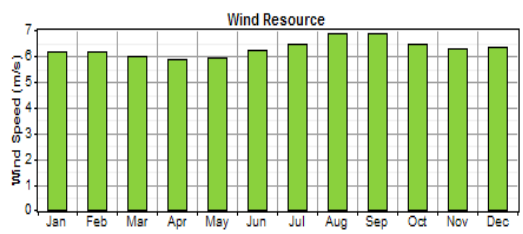

Figure 4. Average wind speed in m/s for Armidale NSW
Source (Maklad, 2014b)

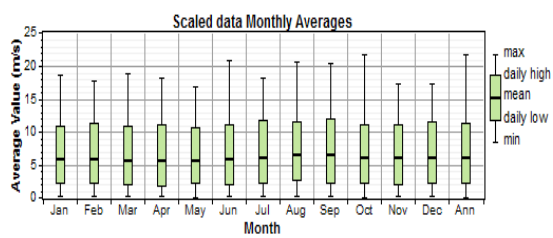

Figure 5. Maximum, Mean and low wind speed for Armidale NSW
Source (Maklad, 2014b)

As stated in the introduction part of this article, it is practical and pragmatically to consider partial load to be covered by hybrid renewable energy, as eliminating fossil fuel electricity generation is not possible in light of the fact that is vastly and widely used. Hence, it is opted to consider 50% of the average daily load of a residential virtual house to be fed by a hybrid system, refereeing back to Table 2., target renewable energy load is calculated in Table3.

Season	Months	1 Occupant	2 Occupants	4 Occupants	6 Occupants
		Avg. Daily kWh	Avg. Daily kWh	Avg. Daily kWh	Avg. Daily kWh
Winter	Jun–Jul-Aug	9	11.5	16	21
Spring	Sept-Oct-Nov	6.5	8	11	14.5
Summer	Dec-Jan-Feb	7.5	9	12.5	16.5

Autumn	Mar-Apr-May	6	7.5	10.5	13.5

Table 3. Targeted electrical load to be covered by hybrid renewable solar, wind and biomass hybrid system. Source (Maklad, 2014a)

An optimization process using HOMER to provide optimal sizing, highest energy production and efficiency with NPC cost for a wind and solar hybrid system based on occupancy has been conducted. Table 4 shows the selected hybrid system components, quantities, sizing, separate costs and total accumulated costs over the project life time (25 years).

A further cost comparison has been conducted between the hybrid system accumulated costs over 25 years and the already in use rational fossil fuel electricity generation and supply system, considering the current kWh fees rate, in Armidale, of 0.35 USD with an adjustment of a five present annual increase to cove the inflation rate and the increase of electricity prices which is increasing on annual basis. Table 5 details the costs of each scenario and the balance between both costing scenario over 25 years for occupancy rate from 1 to 6. It is all in favor of a the proposed hybrid wind and solar system with considerable amounts of money.

Occu-pants	Daily Load	Hybrid System Components					Total Cost over the project life time (25 Years) in AUD		
		Wind Turbines kW	Solar PV Kw	Biomass Gasifier	Battery	Converter	Capital	O&M	Total
1	9	2 x 2kW	7.5 Kw	2 Kw	10 kWh	15 kW	24,150	8,750	32,900
2	11.5	3 x 2kW	10 Kw	3 kW	15 kWh	20Kw	34,500	11,000	45,500
4	16	2x5kW	13 kW	7.5kW	20 kWh	25kW	56,200	15,000	71,200
6	21	1x10Kw+ 1x5kW	15kW	10 kW	25 kWh	35kW	75,750	20,000	95,750

Table 4. Hybrid system optimal size and relevant costing for Armidale NSW.

Occupants	Annual Load Consumption kWh	Target Load kWh	Target Load accumulative costs over (25 years)	Renewable Hybrid System Total Cost	Balance over the project life time (25 Years)
1	5,250	2,625	43,850	27,400	10,950
2	6,705	3,352.5	56,000	38,100	10,500
4	9,390	4,695	78,430	55,750	7,230
6	12,100	6,050	101,060	74,500	5,310

Table 5. Hybrid system costing versus in use fossil fuel electricity costing for Armidale NSW.

6. Conclusion

In this study, proposed hybrid system comprising solar, wind and biomass localized generators associated with battery racks and converters has been examined for residential buildings in urban Armidale NSW, Australia. A size optimization and costing has been conducted for virtual houses based on current market rates.

This study has relied on announced meteorological data for Armidale city for a relatively reliable period of seventeen years recorded at a weather station in an airport area where there are no surrounding near obstructions. The study concluded that it is a feasible option to utilize such a proposed hybrid system cover a bit more than half of the average daily load consumption over the year since it proved that Armidale has wind and solar energy sources potentiality. On the other hand, further research study is suggested to investigate the funding options and scenarios of financing of such a considerable investment to be spent in the proposed hybrid systems to help the households to make a decision economy wise.

REFERENCES

Abdin, E. S., A. M. Osheiba, and M. M. Khater. 1999. Modeling and optimal controllers design for a stand-alone photovoltaic-diesel generating unit. IEEE Transactions on Energy Conversion 14(3): 560–565. | Akella, A.K., Sharma, M.P., and Saini, R.P., 2007. Optimum utilization of renewable energy sources in a remote area. Renewable and Sustainable Energy Reviews, 11, 894–908. | Australian Energy Resource Assessment, 2010, Australian Government, Department of Resources, Energy and Tourism, Geoscience Australia. | Australian Wind Energy Association 2002, Best Practice Guidelines for the Implementation of Wind Energy Projects in Australia, AusWEA. | Bagul, A.D., Salameh, Z.M., and Borowy, B., 1996. Sizing of a stand-alone hybrid wind–photovoltaic system using a three-event probability density approximation. Solar energy, 56 (4), 323–335. | Borowy, B.S. and Salameh, Z.M., 1994. Optimum photovoltaic array size for a hybrid wind/PV system. IEEE Transactions on Energy Conversion, 9 (3), 482–488. | Castle, J.A., et al., 1981. Analysis of merit of hybrid wind/photovoltaic concept for stand-alone systems. Proceedings of the fifteenth IEEE PV specialist's conference, 734–744. | Celik, A.N., 2003. Techno-economic analysis of autonomous PV–wind hybrid energy systems using different sizing methods. Energy Conversion and Management, 44, 1951–1968. | Clean Energy Australia, 2011, Australian Government, Clean Energy Future. | Dalton, G.J., Lockington, D.A., and Baldock, T.E., 2008. Feasibility analysis of stand-alone renewable energy supply options for a large hotel. Renewable Energy, 33, 1475–1490. | Deshmukh, M.K. and Deshmukh, S.S., 2008. Modeling of hybrid renewable energy systems. Renewable and Sustainable Energy Reviews, 12, 235–249. | Ding, J.J and J. S. Buckeridge. 2000. Design considerations for a sustainable hybrid energy system. IPENZ (The Institution of Professional Engineers New Zealand) Transactions. 27 (1). | Elhadidy, M.A. and Shaahid, S.M., 2004. Role of hybrid (wind + diesel) power systems in meeting commercial loads. Renewable Energy, 29, 109–118. | Engineering, Centre for Renewable Energy and Sustainable Technologies Australia, Vol 2, issue 1, p123–128. | Energy in Australia, May 2013, Australian Government, Department of Resources, Energy and Tourism, Bureau of Resources and Energy Economics. | Hybrid optimization model for electrical renewable (HOMER) software by National Renewable Energy Laboratory (NREL), USA. http://www.nrel.gov/homer. | Kamel, S. and Dahl, C., 2005. The economics of hybrid power systems for sustainable desert agriculture in Egypt. Energy, 30, 1271–1281. | Khan, M.J. and Iqbal, M.T., 2005. Pre-feasibility study of stand-alone hybrid energy systems for applications in Newfoundland. Renewable Energy, 30, 835–854. | Maklad, Y. 2014a. Sizing and Costing Optimisation of a Typical Wind/PV Hybrid Electricty Generation System for a Typical Residential Building in Armidale NSW, Australia. International Journal of Energy Economics and Policy 4(2): 154-162. | Maklad, Y. 2014b. A Hybrid Renewable Energy System (Wind and Solar) Size Optimization and Costing for Residential Buildings in Urban Armidale NSW, Australia. Bulletin of Energy Economics. September 2014:50-61. | Maklad, Y. 2014c. Preliminary Possibility of Utilising Renewable Energy for Domestic Electricity Generation in Rural and Regional Australia. Bulletin of Energy Economics. June 2014:50-61. | Markvart, T., 1996. Sizing of hybrid photovoltaic–wind energy systems. Solar Energy, 51 (4), 277–281. | Nouni, M.R., Mullick, S.C., and Kandpal, T.C., 2008. Providing electricity access to remote areas: An approach towards identifying potential areas for decentralized electricity supply. Renewable and sustainable energy reviews, 12, 1187–1220. | RES, 2004a. Wind energy – prospects and potential. Hyderabad: CII – Godrej GBC. | RES, 2004b. Solar photovoltaic – prospects and potential. Hyderabad: CII – Godrej GBC. | Salas, V. and Olias, E., 2000. Hybrid powering system for stand-alone remote telecom applications. Proceedings of the twenty second international telecommunication energy conference (INTELEC), 311–316. | Shaahid, S. M., and M. A. Elhadidy. 2003. Opportunities for utilization of stand-alone hybrid (photovoltaic+diesel+battery) power systems in hot climates. Renewable Energy 28(11): 1741–1753. | Sharma, H.K., S. Islam, and T.L. Pryor. 2000. Dynamic Modelling and Simulation of a Hybrid Wind Diesel Remote Area Power System, International Journal of Renewable Energy. | Tina, G., S. Gagliano, and S. Raiti. 2006. Hybrid solar/wind power system probabilistic modelling for long-term performance assessment. Solar Energy 80: 578–588. |