Volume : 2 | Issue : 11 | Nov 2013 • ISSN No 2277 - 8160

Research Paper Engineering

Closed Loop Control of Sitched Reluctance Motor Drives Using Z-Source Inverter with The Modified Rule Base of Fuzzy Logic Based P1Controller

M.Hari Prabbu M.E-Final year,Paavai college of Engineering, Anna University- Chennai

ABSTRACT

This paper is based on the reduction of oscillation, and robustness. However, due to the control rule base, the closed loop control of Switched Reluctance Motor drives using Z-Source Inverter with the modified rule base of 5x5 using Fuzzy Logic Con froller(FLC) with the output scaling factor(SFself-tuning mechanism are proposed. The aim of this paper is to simplify the program complexity of the controller by reducing the number of fuzzy sets of the membership fun ctions(MFs) without losing the system performance and stability via the adjustable controller gain.ZSI exhibits both voltage-buck and voltage-boost capability. It reduces line harm onics, improves reliability, and extends output voltage range.The output SF of the controller can be tuned continuously by a gain updating factor, whose value is derived from fuzzy logic,with the plant error and error change ratio as input variables. Then the expected results,carried out on a four-phase 6/8 pole SRM based on the dSPAC'EDS11O4 platform, to show the feasibility and effectiveness of the devised methods and also performance of the proposed controllers will be compared with conventional counterpart.

KEYWORDS : Fuzzy logic controller, scaling factor Among these techniques, SF tuning is the mosl (SF), switched reluctance motor (SR1VI), variable-speed drives

I. INTRODUCTION

As well as the development of high speed microcontrollers with powerful computation capability, switched reluctance motor (SRM) drives are under consideration in various applications requiring high performance.SRIVIs inherently feature numerous merits like simple and rugged structure, being maintenance free, high torque—inertia ratio, fault-tolerance robustness and reliability, high efficiency over a wide range of speeds, etc .The requirements for variable-speed SRM drives include good dynamic and steady-state responses, minimum torque ripple, low speed oscillation, and robustness. However, due to the heavy nonlinearity of the electromagnetic property and the coupling relationships among flux linkage torque, and rotor position, it is not easy for an SRIVI to get satisfactory control characteristics Therefore, new structure designs [lj,high performance magnetic cores [2].

Intelligent control techniques such a fuzzy logic control (PLC), neural network control or genetic algorithm may allow better performance Intelligent control approaches try to imitate and learn the experience of the human expert to gel satisfactory performance for the controlled planl [31.One of the most powerful tools that can translate linguistic control rules into practical operation mechanism is the PLC. It has been shown that fuzzy control can reduce hardware and cosl and provide better performance than the classical PT, PD, or PID controllers [6].

Recently, fuzzy control theory has been widely studied, and variom types of fuzzy controllers have also been proposed for the SRM to improve the drive performance further [31,[7]—[91.Performance of the PLC are scaling factor (SF) tuning, mle base modification inference mechanism improvement, and membership function redefinition and shifting Among these techniques, SF tuning is the mosl used approach, and it has a significant impact on the performance of an PLC. The initial parameters and scaling gains of the controller are optimized by the genetic algorithm to minimize overshoot settling time, and rising time.

An adaptive fuzzy controller for torque ripple minimization is presented by Mir *et al [4]* Aiming at torque-ripple minimization, the controller is independent from the accurate SRM model and can adapt to the change of motot characteristics. These characteristics include position error robustness, avoidance of negativr torque production, and torque-ripple minimization This study was aimed at reducing the torque ripp1 and acoustic noise by an efficient fuzzy control algorithm. An adaptive FLC with scaling gair tuning is proposed in [8]. The universe of discourse (UOD) of the fuzzy sets can be tuned by altering the scaling gain according to the input variables

This significantly improves the system transient and steady state responses Koblara proposed a fuzzy logic speed controller for SRIVI drives [91 Fuzzy controller can produce smooth torque and improve the system performance.Z-source inverter system for adjustable speed drives (ASD)[l 1]. It can produce any desired output ac voltage, even greater than the line voltage.It reduces line harmonics,and extends output voltage range.It is a relatively recent converter topology that exhibits both voltage-buck and voltage-boost capability[131.ZSI is designed suitable for wind power conversion system[lO1.The main challenge in wind power system to maintain a constant voltage at the output with unpredictable variation in wind speed,is suitably taken care in steady state through buck-boost-capability of (ZSI). The most concerning disturbances affecting the quality of the power in the distribution system are voltage sag!swell[12].The ZSI uses an LC impedance grid, prepares the possibility of voltage buck and boost by short circuiting the inverter legs. Additionally a fuzzy logic control scheme for Z-source inverter based DVR is proposed to obtain desired injecting voltage.

II. SRM DRIVE SYSTEM

A. SRM Behavior Mode!

In SRM, the torque is generated due to the push—pull between reluctance forces. The produced electromagnetic torque is related to the variation of the machine coenergy, and the coenergy varies with the flux linkage, excitation current, and rotor position. The flux linkage, inductance, and torque are highly coupled and nonlinear with the variation of rotor position and phase current. Fig. 1(a) and (b) shows the cross-sectional profile of a four-phase 6/8-pole SRM and the equivalent circuit of one phase winding, respectively.

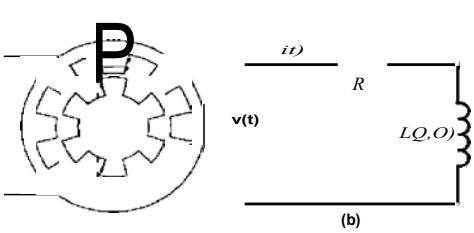

F gure 1: (a) Cross-sec6onal profile and (b) equiva1en circuit of a 6/8-pole SRM

The equivalent circuit can be represented by a resistance R in series with an inductance L (i, 9), which is a function of rotor position 9 and excitation current *i.* From Fig. 1(b), the phase voltage can be expressed by

$$V(t) \quad Ri(t)+ \frac{ciA_{(i,\,9)}}{cit} \qquad (1)$$

With (i 0) L(i 0)i (2)

Where _ is the flux linkage, which is dependent on i and 0. v(t), i(t), and L(i, 0) are the instantaneous voltage across the excited phase winding, the excitation current, and the self-inductance respectively. According to (1) and (2), the dynamic behavior of the rn-phase SRM can be denoted as

$$Vk = \sum_{j=1}^{m} \{ (Rk+W\tilde{a}Lkj)lj+(Lkj \; +ij\cdot\tilde{u}Lkj) \; Thj \; at$$

$$k=1,2.m \qquad (3)$$

where w is the rotor angular velocity and *m* is the phase number. The obtained coenergy is equal to the area enclosed by the ?—i curve over one excitation cycle and can be calculated by

$$Wce(i\ ,O)=f\,A\ (i,\ O)di \quad O=\text{constant} \qquad (4)$$

For a specified current, the induced electromagnetic torque can be obtained by differentiating the coenergy Wee with respect to the rotor position 0, which can be expressed as

$$Te(i,O)= \frac{\tilde{a}Wce(i,O)}{ao} \quad i=\text{constant} \qquad (5)$$

Here, we define an incomplete torque function as

$$Tk = \frac{1}{2} \; 1^{m} \; 1(\text{sgn}\ (k,j)ij \; \frac{\tilde{a}Lkj}{}$$

$$k=1,2.m \qquad (6)$$

Where

$$\text{sgn}\ (k\ \ j) = (', \quad \begin{matrix} \text{if} \quad k=j \\ \text{if} \quad k * j \end{matrix} \qquad (7)$$

From (2) and (4)—(7), including the mutual inductance, the produced totally electromagnetic torque can be denoted as

$$\overset{m}{Ie} = \sum_{k=1}^{m} \; ikik \qquad (8)$$

The mechanical torque of the rotor can be expressed as

$$Tmec = Te - Bw - \frac{}{dt} \qquad (9)$$

where *J, B,* and *Tmec* stand for the machine s moment inertia, friction coefficient, and mechanical torque respectively

B. Drive System Architecture

Shown in Fig. 2 is the configuration of the studied SRM drive system. It consists of four controllers, which include the fuzzy speed controller, the PT current controller, the exciting angle regulation controller, and the commutation logic controller; a gate driver circuit with photo couplers; a power inverter; and the four-phase *6/8*-pole SRM. The fuzzy speed controller receives the speed error signal and converts it into four-phase current commands that will be sent to the current controller. The actual current, sensed by the Hall-effect sensor, is compared with the current command to obtain the current error. According to the error value, the pulse width modulation gating signals of insulated-gate bipolar transistors in an asymmetric half-bridge power inverter are generated by the current controller. The gating signals drive the power inverter through the photo coupler isolation. Z-source inverter system for adjustable speed drives(ASD)it can produce any desired output ac voltage,even greater than the line voltage.It reduces line harmonics,and extends output voltage range.ZSI exhibits both voltage-buck and voltage-boost capability. With the inputs of actual speed, speed errors, current, and rotor position, both algorithms of torque iterative learning control (TILC) and energy iterative learning control (EILC) are run to minimize the torque ripple and energy conversion loss by regulating the incremental turn-on and turn-off angles (AOon,AOoff) and the duty cycle ***(D)*** to enhance the driving performance. The commutation logic controller is used to derive and determine the phase commutation moment according to the rotor position, excitation turn-on angle, and turn-off angle. In order to simplify the hardware complexity all of the four controllers are implemented on a DSP based dSPACE control platform.

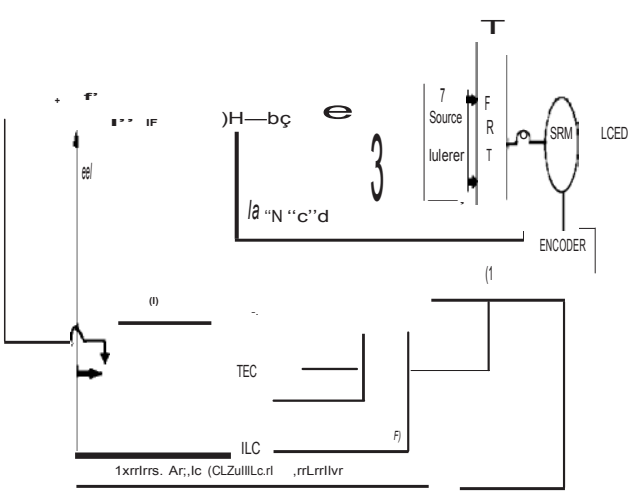

Figure 2 Architecture of the SRM drive system

III. FUZZY LOGIC CONTROLLER DESIGN

In this section, the fuzzy control fundamentals will be outlined first, and then, the key point of self-tuning P1-like fuzzy controller (STFC) will be briefly reviewed. Afterward, the modified design of the proposed STFC will be described in detail.

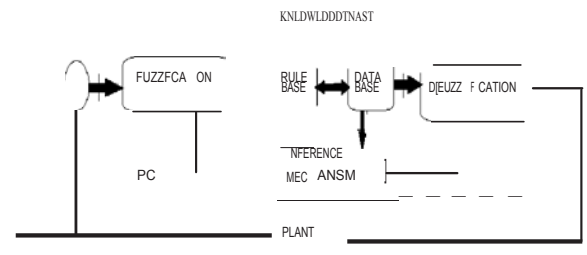

Figure 3: Basic structure of a fuzzy logic control system

A. Fuzzy Control Philosophy

A basic **FLC** system structure, which consists of the knowledge base, the inference mechanism, the fuzzification interface, and the defuzzification interface, is shown in Fig. 3. Essentially, the fuzzy controller can be viewed as an artificial decision maker that operates in a closed-loop system in real time. It grabs plant output y(t), compares it to the desired input *r(t),* and then decides what the plant input (or controller output) *u(t)* should be to assure the requested performance. The inputs and outputs are "crisp." The fuzzification block converts the crisp inputs to fuzzy sets, and the defuzzification block returns these fuzzy conclusions back into the crisp outputs. Inference engine using if-then type fuzzy rules converts the fuzzy input to the fuzzy output.

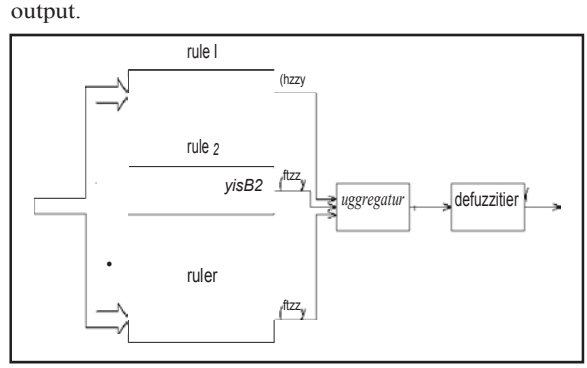

Figure 4 Basic structure ot an Interence engine

D. Gain Tuning Strategy

The PIFC without scaling gain tuning mechanism has a drawback, the defined domain of the input and output variables is fixed. This may result in long settling time and oscillation around the preset speed when the system approaches the steady state. In order to obtain satisfactory performance, the UOD of the controller should be adjusted according to the operating point. Therefore, the fuzzy controller, which can change UOD by tuning scaling gains through a continuous and nonlinear variation of the updating factor, is developed. The self-adjusting mechanism of the proposed fuzzy controllers is described as follows:

1 Variation Effect of Input and Output SFs: SF modulation is one of the most employed solutions to enhance the performance of a fuzzy controller. The effect of SF adjustment is equivalent to extending or shrinking the actual UOD of the input and output variables.

2 Self-Tuning Mechanism: The systemic methods for gain tuning to obtain the optimal response because the determination of the optimal values of the adjustable parameters requires the knowledge of a precise model of the planL Moreover, the practical testing results show that the effect of input SF tuning has lesser impact on system performance than output SF tuning, and both types of SF tuning will increase the system complexity further. Therefore, only output SF tuning is adopted in the proposed two modified STFCs. The design guidelines are described as follows:

Step 1: The proper initial values of *Ge, Gte,* and *GAu* can be obtained by (18) for control rule reduction. Choosing *Ge GiXe* and Gu to cover the whole normalized domain [—1, 11 or interval [emin, *emax].* An appropriate initial operating condition is obtained when a good transient response is achieved.

IV. CONCLUSION

In this paper, based on the reduction of control rule base, thus the closed loop control of Switched Reluctance Motor drives using Z-Source Inverter with the modified rule base of 5x5 using Fuzzy Logic Controller (FLC) with the output scaling factor (SF) self-tuning mechanism by altering a gain updating factor has been devised The modified rule bases are designed to simplify the program complexity of the controller by reducing the number of fuzzy sets of the membership functions without losing the system performance and stability using the adjustable controller gain. Z-source inverter, that exhibits both voltage-buck and voltage-boostcapability It reduces line harmonics, improves reliability, and extends output voltage range.

the output SF can be fine tuned by altering the value of aindex to achieve a relatively small but satisfactory output and guarantee a faster response with relatively small overshoot.

$$Au(k) = Ciindex(k)\ (kAuGAu)\ AUN \qquad (19)$$

$$cLindex(k) = fcLindex\ (e(k),\ Ae(k)) \qquad (20)$$

Step 3. Fine-tune the rules for aindex based on the required response and the particular considerations for deriving the control rules if necessary. Hence the proper aindex is fine-tuned from various operating conditions.

Finally, the performance will be compared to shows that the STFC with rule reduction is the best among the three, but it is close fought to the STFC with combined rule base, and also demonstrates that the proposed controller can quickly regulate itself to adapt to the current environmental change

REFERENCES

[1] p. C. Desai, M. Krishnamurthy, N. Schofield, and A Emadi, "Novel switched reluctance machine configuration with higher number of rotor poles than stator poles: Concept to implementation," *IEEE Trans md Electron.*, vol. *57,* no. 2, pp. *649—659,* Feb. 2010

[2] J. Corda and S. M. Jamil, "Experimental determination of equivalent circuit parameters of a tubular switched reluctance machine with solid steel magnetic core," *IEEE Trans. md Electron.*, vol. *57,* no pp. 304—3 10, Jan. 2010.

[3] P. Vas, *Artificial-Intelligence-Based Electrical Machines and Drives: Application of Fuzzy, Neural Fuzzy Neural, and Genetic- Algorithm -Based Techniques.* London, U.K.: Oxford Univ. Press, 1999

[4] S. Mir, M. E. Elbuluk, and I. Husain, "Torque ripple minimization in switched reluctance motors using adaptive fuzzy control," *IEEE Trans. Ind. Appl.*, vol. 35 no 2, pp. 461—468, Mar/Apr. 1999.

[5] R. K. Mudi and N. R. Pal, "A robust self-tuning scheme for P1- and PD type fuzzy controllers," *IEEE Trans Fuzzy Syst.*, vol. 7, no. 1, pp. 2—16, Feb. 1999