Volume : 2 | Issue : 4 | April 2013 • ISSN No 2277 - 8160

Research Paper | Engineering

Design of DC/DC Boost Converter for the Application of Photovoltaic System

Patel Pradipkumar S.	L. D. College of Engineering Electrical Department, Navrangpura, Ahmedabad-15
Hathila Ajaykumar V.	L. D. College of Engineering Electrical Department, Navrangpura, Ahmedabad-15
Prof. B. N. Vaidya	L. D. College of Engineering Electrical Department, Navrangpura, Ahmedabad-15

ABSTRACT

The paper presents the application & design of DC/DC boost converter. The input is given by PV array and therefore the design and simulation in this paper covers the whole range of radiations. DC/DC boost converter is applied to photovoltaic system for the maximum power point tracking. In the paper we analyze the equations of a DC-DC boost converter and propose a design components and simulation of dc-dc converter and pv array under different radiation condition.

KEYWORDS: MATLAB,DC-DC boost converter simulation, PV array

I-INTRODUCTION

DC/DC converters are used in regulated switch mode DC power supplies. The input of these converters is an unregulated DC voltage because it is given by PV array and therefore it will be fluctuated due to changes in radiation. In these converters the average DC output voltage must be controlled to be equated to the desired value although the input voltage is fluctuated. Now if the energy storage capacity of the converter is too small or the switching period is relatively too long, then the converter would have transmitted all the stored energy to the load before the next cycle begins.

This condition introduces an idling period immediately following the injection interval, during which the converter is not performing any specific task [1,2,3]. The converter can operate in two different modes depending upon its energy storage capacity and the relative length of the switching period. The two modes are known as the continuous conduction and discontinues conduction modes. Fig. 1 shows the model of the DC-DC boost converter.

The full details of the boost converter topology have been already discussed in [4,5,6]. DC/DC boost converter only needs four external components: Diode, Electronic Switch, Inductor, and capacitor.

II-METHODOLOGY

Conversion modes

The DC/DC converter operates in two modes, a Continuons Conduction Mode, CCM for efficient power conversion and Discontinuons Conduction Mode DCM for low power or stand-by operation.

Continuons Conduction Mode

Mode 1 = {0<t≤ton} Mode 1 = when IGBT's is switched on at t=0 and terminates at t=ton. The equivalent circuit for the mode 1 is shown in Fig. 2. The inductor current iL(t) greater than zero and ramp up linearly. The inductor voltage is Vi.

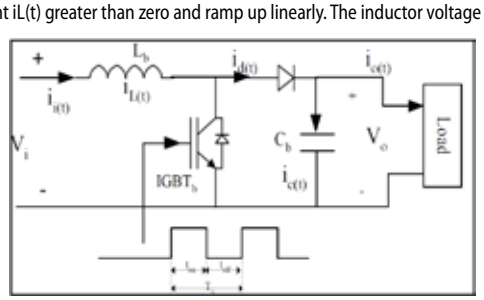

Fig. 1 Circuit Diag. of DC/DC Boost Converter [9].

Mode 2 = {ton<t≤Ts}

Mode 2 = when IGBT's is switched off at t=ton and terminates at t=Ts. The equivalent circuit for the mode 2 is shown in Fig. 3. The inductor current decrease until the IGBT's is turned on again during the next cycle. The voltage across the inductor in this period is Vi-Vo.

Since in steady state time integral of the inductor voltage over one time period must be zero.

[5,7]……..(1)

Where;

Vi : The input voltage, V.

Vo : The average output voltage, V.

ton : The switching on of the IGBT's,

toff : The switching off of the IGBT's,

Dividing both sides by Ts and rearranging items yield

$\mathbf{V_o / V_i = T_s / t_{off} = 1 / (1-D)}$ [5,7]……..(2)

Where;

Ts : The switching period, s.

D : The duty cycle.

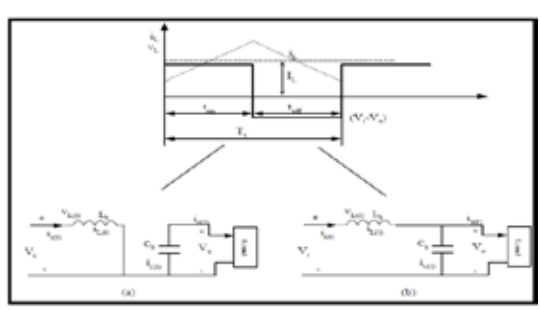

Fig 2: CCM mode of boost converter

(a) Mode 1 {0<t≤ton} (b) Mode 2 (ton<t≤Ts)

So, Vo is inversely proportional to (1-D). it obvious that the duty cycle, D, can't be equal to 1 otherwise there would be no energy transfer to the output. assuming a lossless circuit,

Pi=Po, then

$\boldsymbol{I_i V_i = I_o V_o}$.....(3)

$\mathbf{I_o / I_i = 1-D}$……..(4)

Where;

Io : Average output current, Amp.

Ii : Average input current, Amp.

Discontinuons Conduction Mode

If the current following through the inductor falls to zero before the next turn-on of the switching IGBT's, then the boost converter is said to be operating in the discontinuous conduction mode.

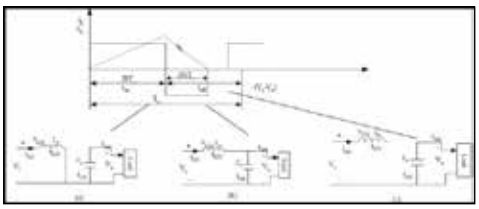

Fig 3: CCM mode of boost converter

(a) Mode 1 {0<t≤ton} (b) Mode 2 ton<t ≤ (D+D1)Ts (c) Mode 3 (D+D1) Ts <t≤Ts

If we equate the integral of the inductor voltage as shown in Fig. 2-4 over one time period to zero,

$V_i D T_s + (V_i - V_o) D_1 T_s = 0$.....(5)

Then;

$V_o / V_i = (D_1 + D) / D_1$……..(6)

And

$I_o / I_i = D_1 / (D_1 + D)$ (since Pi=Po) ……..(7)

From Fig. 3c, the average input current, which is equal to the inductor current, is

$I_i = (V_i / 2L_b) (DT_s) (D+D_1)$……..(8)

Using Equ. (7)

$I_o = [(V_i T_s)/(2L_b)] D D_1$ ……..(9)

In practice, since Vo is held constant and D varies in response to variation in Vi, it is more useful to obtain the required duty cycle, D, as a function of load current for varies values of Vo/Vi.

The critical inductance, Lbc, is defined as the inductance at the boundary edge between continuous and discontinuous modes and is defined as:

$L_{bc} = R * D (1-D)^2 / 2 * F$……..(10)

where;

R : The equivalent load, Ω.

Fs : The switching frequency, Hz

The switching frequency has been chosen arbitrarily to minimize the size of the boost inductor and limit the loss of the semiconductor device. At higher frequencies the switching losses in the IGBT's increase, and therefore reduce the overall efficiency of the circuit. At lower frequencies the required output capacitance and boost inductor size increases, and the volumetric efficiency of the supply degrades [9].

Selection Of The Semiconductor Device

The main switching element has been chosen to handle the worst case current and voltage stresses. The maximum voltage stress on the switching device occurs when the PV output voltage is maximized, so:

Vmax,stress =Vpv,max ……..(11)

Where;

Vpv,max : is the maximum input voltage from PV array, Volt.

The maximum current stress occurs when system power is predominately provided by the PV.

Selection of the inductor

Large inductance values tend to increase the start-up time slightly while small inductance values allow the coil current to ramp up to higher levels before the switch turns off. Inductors with a ferrite core or equivalent are recommended. It should be ensured that the inductor's saturation current rating for highest efficiency is to be used a coil with low DC resistance.

Boost inductance is selected based on the maximum allowed ripple current at minimum duty cycle, D, at maximum input voltage, Vinput. Given that the switching frequency, Fs, the boost inductor value may be optimally determined to set the converter operating mode in the required load and line range. The critical inductance is defined as the inductance at the boundary edge between continuous and discontinuous modes and is defined as [5,7]:

$Lc = R*D(1- D)^2 / 2*Fs$……..(12)

Where,

Fs : The switching frequency, Hz

D : The duty cycle,

R : The equivalent load, Ω.

Selection of the capacitance required

The primary criterion for selecting the output filter capacitor is its capacitance and equivalent series resistance, ESR. Since the capacitor's ESR affects efficiency, low-ESR capacitors will be used for best performance. For reducing ESR is also possible to connect few capacitors in parallel. The output filter capacitors are chosen to meet an output voltage ripple specifications, as well as its ability to handle the required ripple current stress. An approximate expression for the required capacitance as a function of ripple voltage requirement, ΔVo, D, switching frequency, Fs and output voltage, Vo is given as [5,7]:

$C_b \geq (Vo * D) / (Fs * \Delta Vo * R)$……..(13)

III- APPLICATION AND RESULTS

Design DC/DC Boost converter

The operating conditions the inductance have been chosen at a value smaller than the critical inductance and for this converter is set at 5 mH.

Simulation of DC/DC Converter

To verify the response of the converter a complete dynamic model of PV array and DC/DC converter scheme have been simulated by Matlab/ Simulink software [10],[11]. The DC/DC converter has been simulated for variation of the solar radiation from 1000 W/m^2 to 250 W/m^2. The simulink block diagram of a boost converter and its controller is shown in Fig 4. The model's input is taken power from solar cells array and the output of the model is fed to the R load. The output voltage from PV array, Vpv which is the input to boost converter. The PV array has been tested for change in solar radiation.

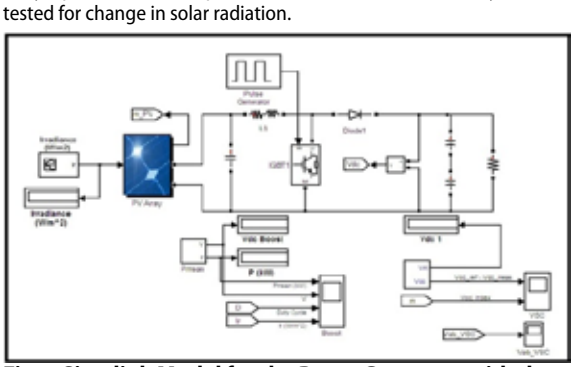

Fig. 4 Simulink Model for the Boost Converter with the R load

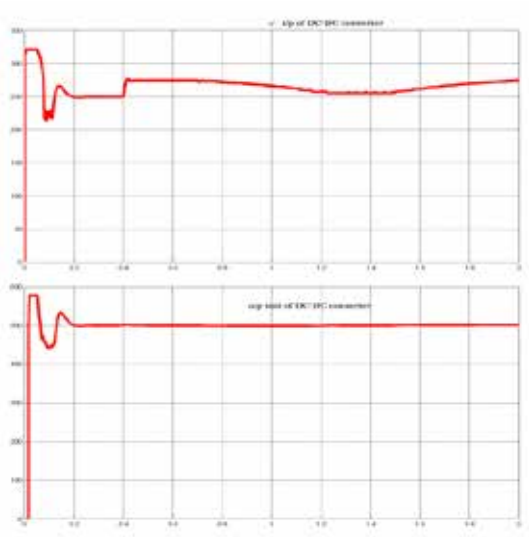

Fig 5: Simulation results of input and output voltage of dc-dc converter under different radiation condition

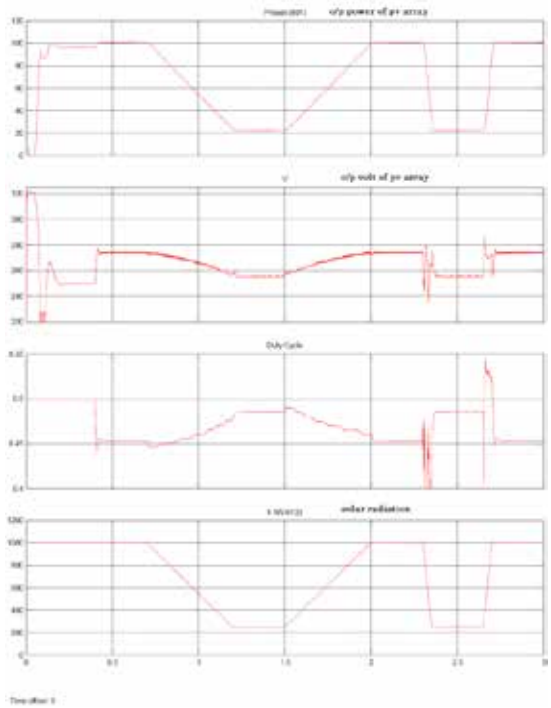

Fig 6: Simulation results of pv array o/p power, pv array o/p voltage,dc-dc converter duty cycle under different radiation condition

IV-CONCLUSION

This paper concerns with design and simulation of DC/DC boost converter to operate in PV system. From the results obtained above, the following are the salient conclusions that can be drawn from this paper:

- Design the DC/DC converter for all operating condition have studied and proposed.
- Detailed modeling and simulation of a DC/DC converter connected to PV system have proposed.
- Boost inductor is chosen to be 5 mH for variation of the solar radiation from 1000W/m^2 to 250W/m^2

REFERENCES

[1] Konstantin P. Louganski, "Modeling and Analysis of A DC Power Distribution System In 21st Century Airlifters", M. Sc., Electrical Engineering Dept., Faculty of the Virginia Polytechnic Institute and State University, September 30, 1999, Blacksburg, Virginia. [2] Jaber Abu-Qahouq and Issa Batarseh, "Generalized Analysis of Soft-Switching DC-DC Converters", ISCAS 2000 – IEEE International Symposium on Circuits and Systems, May 28- 31, 2000, Geneva, Switzerland, pp. 507-510. [3] Woywode, O.; Güldner, H. "Application of Statistical Analysis to DC-DC Converter" International Power Electronics Conference, IPEC 2000, Tokyo, Japan 2000. [4] Pradipkumar s. Patel and Dhirendrakumar r.rana"MATLAB based Simulation of Photovoltics Solar Module and Arry at diffrent radiation values"M.E.(student) Electrical engineering Dept., Published IJAIR, Volume 2,Issue 3,March 2013 [5] Mohammad H. Rashid, "Power Electronics: Circuits, Devices and Applications", Prentice-Hall, Inc., Englewood Cliffs, Book, Second Edition, 1993. [6] B. W. Williams, " Power Electronics; Devices, Drivers, Applications and Passive Components", Book, Second Edition, Educational Low-Priced Books Scheme; ELBS, 1992. [7] Mohan Ned, Undeland Tore M. and Robbins William P. ,"Power Electronics ,Converters Applications and Design", John Wiley & Sons, Inc., Book, 1995. [8] C. K. Tse and K. M. Adams, "Qualitative analysis and control of a DC-to-DC Boost Converter Operating in Discontinuous Mode", IEEE Transactions on Power Electronics, Vol. 5, No. 3, July 1999, Pp 323-330.