Volume-4, Issue-5, May Special Issue-2015 • ISSN No 2277 - 8160

Research Paper Engineering

MULTICHANNEL ACCESS POINTS WITH SEAMLESS HANDOFF IN IEEE 802.11 WIRELESS NETWORKS

G.Sivakoteswarrao Dept of ECE, NARAYANA ENGG COLLEGE, GUDUR.

Y.Supraja Dept of ECE, NARAYANA ENGG COLLEGE, GUDUR.

ABSTRACT

It is obvious that a seamless handoff ought to be sought after for better administration. This reason, we outline a novel and achievable 802.11 handoff plans for 802.11 remote neighborhoods (WLANs). In the proposed handoff conspire; the 802.11 entrance focuses have different radios. One of the numerous radios is only held for examining purposes. It unquestionably helps the 802.11 versatile stations (STAs) to effectively hunt neighboring APs. Additionally, the saved selective channel is accessible for information casing trades. For viable perceptions, we execute the proposed handoff plan. At that point, we assess handoff exhibitions by contrasting the parcel misfortunes between the proposed handoff plan and the current handoff plans. In light of the assessment, we have manufactured logical models to gauge general bundle misfortunes while a STA moves from an AP to another AP in an indoor situation.

KEYWORDS : Handover, mobile radio mobility management,WIFI, WLAN.

Introduction:

Because of the business achievement of 802.11 remote neighborhoods (WLANs), we are witnessing explosive expansions of the regions covered by 802.11 WLANs. Appropriately, we are urged to stroll around over the 802.11 WLANs scope With ongoing administrations requesting stringent nature of administration prerequisites. The 802.11 standard indicates the 802.11 handoff operation comprising of three systems: 1) Scanning; 2) authentication; and 3) Re-association. The 802.11 filtering is a system for an 802.11 STA to pursuit neighboring access focuses (APs). The filtering STA may pick the best proper AP among examined APs for its handoff. The verification and Re-affiliation strategies are utilized for the acceptance and the association foundation for the checking STA.

I attempted to kill checking idleness to continue conveying between a filtering STA and a serving AP. For this reason, they proposed 802.11 handoff conspires by using various radios. In their plans,STAs are designed to try scanning procedures with one radio for selective checking purposes. Alternate radios are utilized for ordinary 802.11 operations, including the 802.11 edge trades. Their plans add to noteworthy lessening in potential 802.11 edge misfortunes and casing transmission deferrals amid the checking method. Their advantages are constrained in that the proposed plans oblige STAs to have no less than two radios regardless of those regular business STAs have stand out radio. All the radios of an AP are situated to have thesame fundamental administration set character.

Related work

In the 802.11 standard, a handoff strategy comprises of scanning, authentication, and Re-association. For the checking, latent examining and dynamic filtering are characterized. A STA embracing the inactive checking ought to get APs' guide outlines, which are transmitted each reference point interim. Regularly, a reference point interim is 100ms. a STA with the dynamic filtering ought to show test solicitation frame(s) in a channel and after that sit tight for test reaction outlines, with which adjacent APs accepting the test request(s) answer. The filtering STA may lead the checking strategy in every single accessible channel. It suggests that the checking time increments in extent to the quantity of the accessible channels.

For dynamic examining, the 802.11 standard indicates two Configuralable parameters deciding to what extent a STA ought to sit tight for test reactions in the wake of sending a test solicitation, specifically, Max Channel Time and Min Channel.

Existing system:

In existing exploration work, the analysts proposed the multi radio system with client end to decrease the examining deferral. In their plans, STAs are intended to take a stab at checking strategies with one radio for selective examining purposes. Alternate radios are utilized for ordinary 802.11 operations, including the 802.11 edge trades. Their plans add to huge decrease in potential 802.11 edge misfortunes and casing transmission deferrals amid the examining strategy.

Notwithstanding, their advantages are constrained in that the proposed plans oblige STAs to have no less than two radios regardless of those commonplace business STAs have stand out radio.

Disadvantage:

Their advantages are restricted in that the proposed plans oblige STAs to have no less than two radios notwithstanding those typical commercial STAs have only one radio.

Proposed method:

In our project we are implementing the propose APs to be furnished with various radios, though a STA has a solitary radio. All the radios of an AP are situated to have the same essential administration set identity1 (BSSID). One of them is arranged to work in a solely held channel for the checking. That is, all the APs have one radio working in the held channel. At that point, a STA filters just the held channel without expecting to output different channels.

Consequently, we don't have to stress over checking time regardless of to what extent the filtering time is. It is on account of an ordinary filtering STA with a solitary radio can keep on directingnormal 802.11 operation with the serving AP.

Advantage:

- Our proposed schemesdo not have to stress over examining time regardless of to what extent the filtering time is.
- It is because a typical scanning Station with a single radio can continue to conduct normal 802.11 operation with the serving Access Point.
- To Reduce Handoff Delay.
- To Reduce Data transmission delay.
-

Access Point Connectivity Management

The AP contains the device controller which will desire toshare the message/control info to each unit of block. The MN list contains the details of mobile node availability. And data unit contains the data which will be received during the communication process. And timer triggers the AP to generate periodic propping by scanning packet generator. In our project 1st phase, we have considered combination of active and passive scanning, which means the mobile node can scan the AP availability and as well as AP also can share the Periodic scanning message.

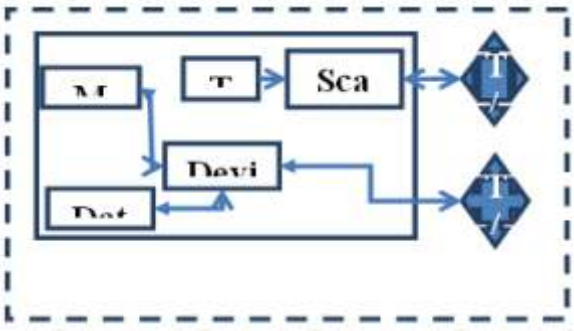

Fig: 5.1 Access Point

The mobile node contains the details of AP availability and channel usage info and the timer generates the periodic interval to give own info to AP by scanning packet generator. The data unit is used to collect the data from AP.

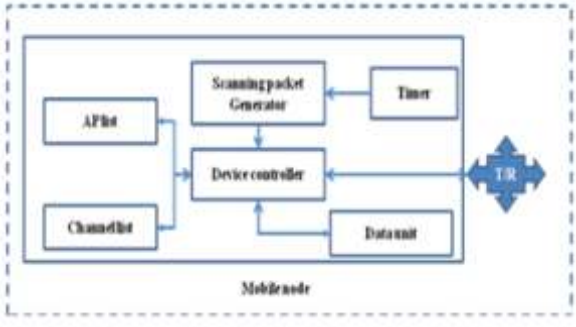

Fig: 5.2 Mobile Nodes.

We condense the natty gritty technique as takes after. Going before sifting, a STA transmits an invalid edge, i.e., a data diagram without a payload, with a power saving mode (PM) bit set to 1 to instruct its serving AP that it enters the power saving mode (PSM), and the serving AP begins to pad data housings destined for the STA.

After the STA gets the test response traces, it picks the most suitable AP to proceed with an affirmation. In the 802.11 standards, test response and reference point edges are allowed to go on the AP information. We build up this information by incorporating the channel information concerning AP's various radios.

Algorithm:
In this paper, we investigate the integration and AP connectivity issues in WiMAX/WLAN Wireless Networks. And we display the hypothesis execution show asbellow.

Step1: Initializing a mobile node it can access both WiMAX/WLAN
Initialize WiMAX/ WLAN networks.
Step2: Node will check the available networks.
Step4: If { network available } {
If {only one network } {
Get communication from that.
} else {
For {each network} {
Checks which are the best network.... {Bandwidth and packet delay}
Theory calculation....
Bandwidth calculation for wimax

$$\begin{cases} B_d = \left(1 - \frac{AAS_d}{n_d}\right)\frac{b_{cp,d}}{T_f} \\ B_u = \left(1 - \frac{AAS_u}{n_u}\right)\frac{b_{cp,u}}{T_f} \end{cases}$$

Delay calculation wimax

$$t = t_s + t_q + t_m + t_t.$$

Bandwidth for wifi

$$BW = B_0 - L\frac{NAV}{T_o + \frac{1}{2}T_{bo}(N-1)}.$$

Delay for wifi

$$t = t_q + t_w = \frac{M_s^2}{1 - M_s} + t_w.$$

}
Step5: Mobile node compares both networks
VHOM selects best

Step6:
If no AP or BS detected
Checks whether any other mobile station available with AP or BS connection and have enough bandwidth limit
If mobile station detected with enough quality and then switch to Mobile station communication
Step 7:
Else
No communication

Performance evaluation
For our examining reason we are utilizing the apparatus NS2. By utilizing Ns2 we can show the prototype model of our project with enhancement such as Access Point connectivity Management in WLAN property.

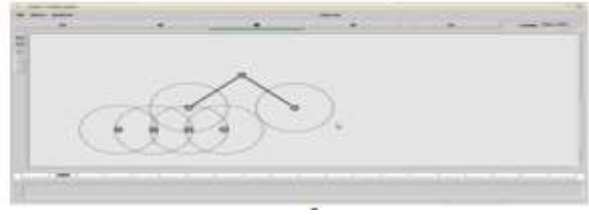

Figure: Nam output for Access Point connectivity Management in WLAN.

In this Nam window yield we are executing model of WLANs.In this model there are the 7 nodes (Server and Access Points and Mobile nodes) are available. In this model, Focuses and Mobile hubsmean it can't get communication.

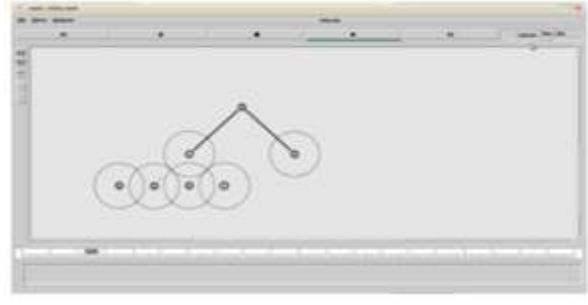

Figure: Nam output for Access Point connectivity Management when packet transfer from AP to MN.

In our enhanced prototype model, we implemented Access Point connectivity Management when packet transfers from AP to MN. So whenever Mobile Node not in the coverage of AP, then AP can hunt down another Mobile Node which is sufficiently having additional data transmission and coverage area. If mobile station having extra bandwidth or coverage area at that point that hub going to go about as a primary Mobile Node or user and searching Mobile Node is acting as secondary Mobile Node alternately client. On the off chance that essential client is identified by the AP mean AP can make communication through the server.

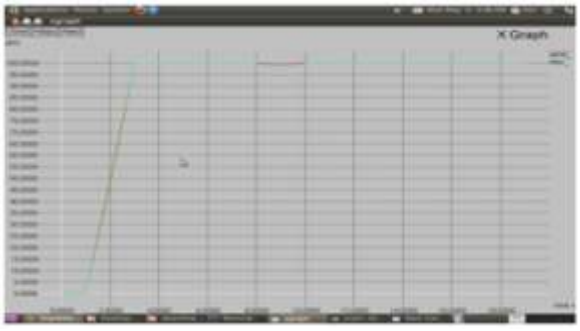

Figure: X-graph output.

We are analyzing performance through the x-graph. From this graph we can see the parcel conveyance capacity is high for Proposed work compare than Existing work operation.

Conclusion:

We have proposed a novel and conceivable separating arrangement for the 802.11 handoff and after that executed the proposed inspecting arrangement with wifi. The trial results exhibit that the proposed separating arrangement fantastically decreases data plot hardships, while the checking time stays unaltered. We have assessed the amount of package disasters depending upon the handoff schemes by numerically researching the execution of the handoff arranges. In rundown, the proposed checking arrangement is profitable for the application, for instance, voice over IP and blended media spilling organizations since those applications are exceptionally sensitive to data diagram incidents.

Future Scope:

One primary user can act as an access point for more than one user.The primary node can access the network from server, but in the future if the server is able to control the node, then it can also control the secondary node which is not in its range. This technology will be used in military applications and in airport applications and walky-talky applications and Mobile Applications etc.

Acknowledgement

G.SIVAKOTESWARRAO, M.Tech,
Digital Electronics and Comm. Sys (DECS),
Narayana Engineering College,Gudur.

REFERENCES

1) IEEE 802.11 Part 11: WLAN AND MAC and Physical Layer Charecterstics, 2006.|| 2) A. Mishra, M. Shin, and W. Arbaugh, "An observational investiga- handoff process," vol. 33, no. 2, pp. 93-102, Jan. 2003.|| 3) D. Singhal, M. Kunapareddy, V. Chetlapalli, V. B. James, and N. Akhtar, "LTE-Advanced: Handover Interruption time analysis for IM1-A evaluation," in signal processing , July 2012, pp. 81-85.|| 4) M. Yoon et al., "Adaptive Scan: The fast Layer-2 handoff for WLAN.|| 5) Y. Yen, R. Chang, and T. Wu, "A seamless handoff scheme for IEEE 802.11 wireless networks," in Proc. June. 2010, pp. 1-5. || 6) S. Jin, M. Choi, L. Wang, and S. Choi, "Quick examining plans for IEEE 802.11 WLANs in virtual APenvironments," Computer Networks, vol. 55, pp. 2520–2533, July 2011.|| 7) M. E. Berezin, F. Rousseau, and A. Duda, "Multichannel virtual access points for seamless handoffs in IEEE 802.11 wireless networks," in Proc. IEEE 73rd Vehicular Technology Conference (VTC Spring), May 2011, pp. 1-5. || 8) Y. Greenberger and F. Rousseau, "Virtual access points for transparent mobility in wireless LANs," in Proc. IEEE Wireless Communications and Networking Conference, April 2010, pp. 1-6.|| 9) IEEE 802.11f: IEEE Trial-Use Recommended Practice for Multi-Vendor Access Point Interoperability through an Inter-Access Point Protocol across Distribution Systems Supporting IEEE 802.11TM Operation, 2003.|| 10) A. Mishra, V. Shrivastava, D. Agrawal, and S. Ganguly, "Distributed channel management in uncoordinated wireless environments," ACM MobiCom'06, September 2006, pp. 170-181.|| 11) S. Jin, M. Choi, and S. Choi, "Multiple WNIC-based handoff in IEEE 802.11 WLANs," IEEE Communication Letters, vol. 13, no. 10, pp. 751-754, October 2009.|| 12) "Advancement Aware Vertical Handoff of WLAN and Mobile WiMAX for Seamless Ubiquitous Access" Wensum Lee, Eunkyo Kim, Joongheon Kim, Inkyu., Lee and Chunghwa Lee - 2011.|| 13) "Advancement Aware Vertical Handoff of WLAN and Mobile WiMAX for Seamless Ubiquitous Access" Wonjun Lee, Eunkyo Kim, Joongheon Kim, Inkyu., Lee and Chunghwa Lee - 2011.|| 14) "Bandwidth Estimation: Metrics, Measurement Techniques, and- 2003.|| 15) "Bandwidth Recycling in IEEE 802.16 Networks" David Chuck and J. Morris Chang- 2010.