Volume : 3 | Issue : 4 | April 2014 • ISSN No 2277 - 8160

Research Paper Engineering

Passive Rfid Based Guiding System for Blind Peoples

Dr. S. Srinivasan Professor and Head, Department of Information Technology, P. B. College of Engineering, Chennai.

Prof. R. Kumar Associate Professor and Head, Department of ECE, P. B. College of Engineering, Chennai.

ABSTRACT

Walking safely and confidently without any human assistance in urban and unknown environment is a difficult task for blind people. At present we are using GSM/GPS to locate the path but using this there may be delay and location error due to GPS accuracy issues. In this work we are using RFID to overcome the delay caused by GPS. Here we are placing RFID tags at the pedestrian path and whenever the person needs to know the location by reading the data using the RFID reader placed in the sensitive hand stick. Not only the location but also he can also get details about the directions and how much distance away from that particular point. This system is also providing voice alert while they move away from pedestrian path. RF Transceiver is used to provide information about traffic signals which can help them to cross the road without any human assistance.

KEYWORDS : RFID, GPS, GPRS, Reader, Microcontroller and Tracking

INTRODUCTION

A location and tracking system becomes very important to our future world of pervasive computing, where information is all around us. Location is one of the most needed information for emerging and future applications. In this project, we are placing tags in the path of the blind people where he walks.

At present GPS, RF Radar (1,2), Passive RFID/GPRS (3,4,5), Active RFID (6) systems were used. They are severely affected by accuracy and delay issues. The blind man will have the RF reader, controller, RF receiver and the speaker as shown in figure 1. The RF transmitter is placed near the traffic signal. When the RF reader reads the tags, the antennas, which are used for the communication between the tag and the reader, will send the carrier signal which is modified by the reader to the tag. These signals will hit the tag and reads the tag. This data is sent back to the reader and also to the microcontroller where the controller will check whether the number in the tag and the controller is matched. If this is matched then the controller will sent the information stored in the controller to the voice board where the information about the area, the distance and the direction is intimated through speaker. The corner indication tags placed at the end of the pedestrian path will alert the blind person when he comes out of the path. By this we can avoid accidents. The RF transmitter is placed in the traffic signals and it will transmit the status of the signal to cross. The RF receiver is attached with navigation stick to receive the information. So that blind man can even cross the road without any human assistance.

The switch is added to the voice board so that the blind man can get the voice information only when he requires by pressing the switch. But the tag will be read and the process it continuously but the voice message is prevented. Based on the requirement it can be switched ON to get voice information.

2. BLOCK DIAGRAM

The block diagram of the proposed system is shown in the figure 1; this method is very simple and efficient comparing to the existing systems. The main aim of our work is to reduce the delay and error which is caused by GPS/GPRS and RFID/GSM, so that accidents can be avoided.

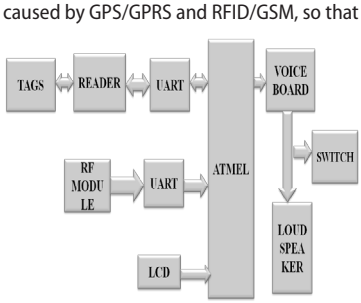

Fig 1 Block diagram of proposed system

In this work the RF reader placed in the stick of the blind people Reads the tags placed in the pedestrian path it will indicate the exact place with distance, the direction and also intimate a warning message if the pedestrian crossed the road. All the intimations are given by means of loudspeaker. Here passive tags are used and the power required is also less. RFID tagging is an ID system that uses a small radio frequency device for identification and tracking purpose. It includes the tag itself, a read/write device and a host system application for data collection, processing and transmission.

The RFID reader is used to read identification information of the cards using radio waves. It has a receiver/transmitter module with antenna.

AT89S52 microcontroller is used because of low power and high performance. It is a 8 bit microcontroller with 8k bytes of in-system programmable flash memory. It is highly flexible and cost effective. Speaker is used to intimate the voice information which is read by the RF reader.

3. ATMEL MICROCONTROLLER

The AT89S52 is a low-power, high-performance CMOS 8-bit microcontroller with 8K bytes of in-system programmable Flash memory. The device is manufactured using Atmel's high-density nonvolatile memory technology and is compatible with the industry-standard 80C51 instruction set and pin out. The on-chip Flash allows the program memory to be reprogrammed in-system or by a conventional nonvolatile memory pro-grammar. By combining a versatile 8-bit CPU with in-system programmable Flash on a monolithic chip, the Atmel AT89S52 is a powerful microcontroller which provides a highly-flexible and cost-effective solution to many embedded control applications. The AT89S52 provides the following standard features: 8K bytes of Flash, 256 bytes of RAM, 32 I/O lines, Watchdog timer, two data pointers, three 16-bit timer/counters, a six-vector two-level interrupt architecture, a full duplex serial port, on-chip oscillator, and clock circuitry. In addition, the AT89S52 is designed with static logic for operation down to zero frequency and supports two software selectable power saving modes. The Idle Mode stops the CPU while allowing the RAM, timer/counters, serial port, and interrupt system to continue functioning. The Power-down mode saves the RAM con-tents but freezes the oscillator, disabling all other chip functions until the next interrupt or hardware reset.

4. DESIGN AND IMPLEMENTATION

4.1. CIRCUIT DISCRIPTION

RF reader is connected port3 of the microcontroller. The first 10 pins of the microcontroller are connected to the RF reader. RFID system is based on storing and simultaneously retrieving information or data, it consists of RFID tag, RFID reader and back-end Database. RFID tags are used to store unique identification information of objects and communicate the tags so as to allow remote retrieval of their ID. RFID technology depends on the communication between the RFID tags and RFID readers. The range of the reader is dependent upon its operational

frequency. Usually the readers have their own software running on ROM and also, communicate with other software to manipulate these unique identified tags.

Basically, the application which manipulates tag deduction information for the end user, communicates with the RFID reader to get the tag information. Readers are electronic devices which can be used as standalone or be integrated with other devices and the following components/hardware into it. These readers are expected to collect or write data onto tag (in case) and pass to microcontroller. For this purpose readers can be connected using RS-232, RS-485, and USB cable as wired options (called serial readers) and connect to the microcontroller.

The range of the RFID tags depends on their frequency. This frequency determines the resistance to interference and other performance attributes. The use/selection of RFID tag depends on the application; different frequencies are used on different RFID tags. Low Frequency works on 125 kHz, it has approximately half a meter reading range and mostly used for short reading range applications

Voice module is connected to the port1. Pin1 is connected to the voice module for recording the location information, distance and direction. Pin2 is used for playing the voice which is recorded in the pin1. Pin3 is used for deleting. There are 32 pins configuration for recording speech. The voice module changes the pitch of voice inputs. Users speak or sing into a microphone while playing keys on a keyboard. Real-time visualizations of the waveforms are displayed on a VGA screen. The modulator outputs frequency-shifted copies of the voice data to match the notes selected from the keyboard while preserving vocal formants as much as possible. This device allows users of any musical ability to sing notes or chords perfectly. The modulator is implemented on a field programmable gate array (FPGA). Inputs are taken via a microphone and a PS/2 keyboard. A VGA monitor is used to display waveforms. MIDI keyboard support was originally planned; however, we could not get it to work in time. The speaker is connected to 17th and 18th pin of the voice module.

RF receiver connected to port0 of the microcontroller. At receiver end we have similar connections for power supply as the microcontroller needs +5V. Similarly to transmitter, there are two push buttons with 10k pull up resistors through 5V supply for RF Module. We are using pin 3.0 to connect data pin of RF module and 1 and 2 pins of RF module is used for GND and VCC. We also have two buttons for selection of code and for receiving the data. Once the data is received by the receiver module that data is demodulated and goes to the receiver pin 10 of microcontroller as per the program. The circuit diagram is shown below which gives detailed description how the RFID reader, voice modulation, LCD, RF module and speaker connected to the microcontroller. RF transmitter receives serial data and transmits to the receiver through an antenna which is connected to the 4th pin of the transmitter. When logic 0 is applied to transmitter then there is no power supply in transmitter. When logic 1 is applied to transmitter then transmitter is ON and there is a high power supply in the range of 4.5mA with 3V voltage supply. RF transmitter is kept separately.

LCD is connected to the port3. Both the liquid crystal material and the alignment layer material contain ionic compounds. If an electric field of one particular polarity is applied for a long period of time, this ionic material is attracted to the surfaces and degrades the device performance. This is avoided either by applying an alternating current or by reversing the polarity of the electric field as the device is addressed (the response of the liquid crystal layer is identical, regardless of the polarity of the applied field).

The RF reader will read tag and gives signal to the microcontroller. The microcontroller will process the data and gives the data to the voice module. The AT89S52 operations that do not use the internal 256-byte RAM addresses from 00h to 7fh are done by a group of specific internal registers, each called a special function register (SFR), which may be addressed like internal RAM, using addresses from 80htoffh. Some SFR's are also bit addressable, as is the case for the bit area of RAM.

This feature allows the programmer to change only what needs to be altered, leaving the remaining bits in that SFR unchanged. Not all of the addresses from80h to ffh are used for SFR's, and attempting to use an address that is not defined or empty results in unpredictable results. PC is not part of the SFR and has no internal ram address. The data will be given as voice intimation to the speaker and a switch is connected to the voice modulation so that it can be controlled by the blind man.

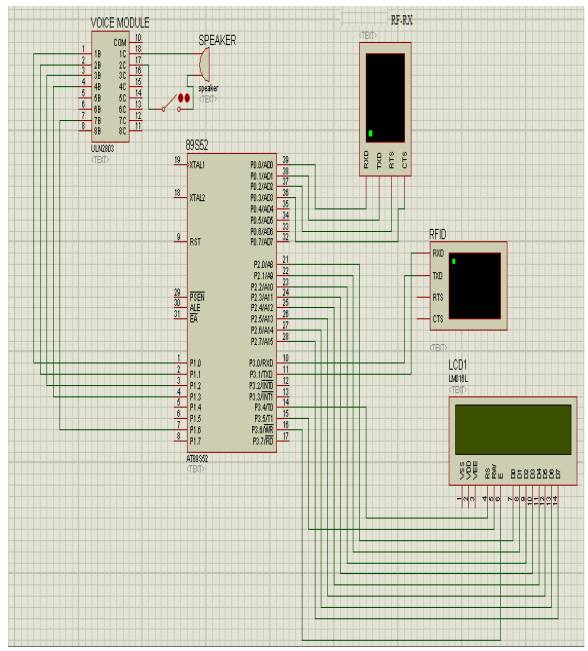

Fig 2. Circuit diagram

5. CONCLUSION

Thus the objective of our work is to design navigation and tracking stick for blind person with a minimum delay and tracking error comparing to the existing system. So, a person with visual impairments can easily travel one place to another without human assistance. The problems faced by their day to day life such as traffic signal crossing are become possible by this system. Whenever the person moves out of the pedestrian path, an alert signal is given to prevent him from accidents. Thus the system can efficiently meet the requirements of the blind persons; further more work is required in implementing the hardware in real time with advancement in technology, this work can be enhanced and has a wide scope in navigation system.

ACKNOWLEDGEMENT

We acknowledge M. Durga Aparna and G. Lukshmi of P. B. College of Engineering for their valuable technical support.

REFERENCES

[1]P. Bahl and V. N. Padmanabhan, "RADAR: An In-Building RF-based User Location and Tracking System," in Proc. IEEE INFOCOM, (2000). | | [2]P. Krishnan, A. S. Krishnakumar , Wen-Hua Ju , Colin Mallows , SachinGanuA System for LEASE: Location Estimation Assisted by Stationary Emitters for Indoor RF Wireless Networks, IEEE INFOCOM 2004,(March 7-11, 2004), Hong Kong. | | [3]Hirohiko Ohkubo, Seiji Kitakaze, Yo Fujishima, Naoto Watanabe,Minoru Kamata, "Integrated Way Finding/Guidance system using GPS/IR/RFID with mobile device, Technology & Persons with Disabilities Conference, (March 14-19, 2005), Los Angeles, CA | | [4]S. Willis, S. Helal, "RFID information grid for blind navigation and Wayf inding," in Proceedings of the Ninth IEEE International Symposium on Wearable Computers, (Oct. 2005). | | [5]Jongwhoa Na, The Blind Interactive Guide System Using RFID-Based Indoor Positioning System, in Computers Helping People with Special Needs, LNCS Volume 4061, ISBN 978-3-540-36020-9,(2006). | | [6]Sergio Polito and et.al., Performance Evaluation of Active RFID Location Systems based on RF Power Measures, in the proceedings of the IEEE 18th International Symposium on Personal, Indoor and Mobile Radio Communications (PIMRC 2007), (September 2007). |