Volume : 2 | Issue : 4 | April 2013 • ISSN No 2277 - 8160

Research Paper | Engineering

Simulation and Analysis of Cascaded H- Bridge Multilevel Inverter Fed Induction Motor Drive

Chirag. T. Patel	M.E. [Power System] Student, Department Of Electrical Engineering, L.D. College Of Engineering, Ahmedabad
Prof. H. D. Mehta	Associate Professor, Department Of Electrical Engineering, L.D. College Of Engineering, Ahmedabad
Alpesh P. Parekh	M.E. [Power System] Student, Department Of Electrical Engineering, L.D. College Of Engineering, Ahmedabad

ABSTRACT

The main objective of this paper is to control the speed of an induction motor by using five level Cascaded H-Bridge multilevel inverter to obtain high quality sinusoidal output voltage with reduced harmonics. The proposed scheme for Cascaded H-Bridge multilevel inverter is multicarrier SPWM control. An open loop speed control can be achieved by using V/f method. This method can be implemented by changing the supply voltage and frequency applied to the three phase induction motor at constant ratio. The proposed system is an effective replacement for the conventional method which produces high switching losses, results in poor drive performance. The simulation results reveal that the proposed circuit effectively controls the motor speed and enhances the drive performance through reduction in total harmonic distortion (THD). The effectiveness of the system is verified through simulation using PSIM9 software.

KEYWORDS: Cascaded H-Bridge multilevel inverter, Induction motor, Multicarrier PWM technique

I. INTRODUCTION

Majority of industrial drives use ac induction motor because these motors are rugged, reliable and relatively inexpensive. Induction motors are mainly used for constant speed applications because of unavailability of the variable-frequency supply [2]. But many applications need variable speed operations. In early times, mechanical gear systems were used to obtain variable speed. Recently power electronics and control systems have matured to allow these components to be used for motor control in place of mechanical gears. These electronics not only control the motor's speed, but can improve the motor's dynamic and steady state characteristics. Adjustable speed ac machine system is equipped with an adjustable frequency drive that is a power electronics device for speed control of an electric machine. It controls the speed of the electric machine by converting the fixed voltage and frequency to adjustable values on the machine side. High power induction motor drives using conventional three phase converters have the disadvantages of poor voltage and current qualities. The presence of significant amount of harmonics makes the motor to suffer from severe torque pulsations, especially at low speed. To improve these values, the switching frequency has to be raised which causes additional switching losses. The concept of multilevel inverter control has opened a new possibility that induction motors can be controlled to achieve dynamic performance [2]. Recently many schemes have been developed to achieve multilevel voltage profile, particularly suitable for induction motor drive applications. The Cascaded H-Bridge method can be applied to higher level converters. As the number of level increases, the synthesized output waveform adds more steps, producing a staircase waveform [3].

In this paper, a three phase five levels Cascaded H-Bridge multilevel inverter fed induction motor drive is designed and implemented. Five levels are realized by cascading two H-bridges with equal dc sources value. The proposed inverter can reduce the harmonic contents by using multicarrier PWM technique. V/f is an efficient method for speed control in open loop. In this scheme, the speed of induction machine is controlled by the adjustable magnitude of stator voltages and its frequency in such a way that the air gap flux is always maintained at the desired value at the steady state. Here the speed of an induction motor is precisely controlled by using five levels cascaded H-bridge multilevel inverter.

II. CONVENTIONAL METHOD

The conventional voltage source inverter produces an output voltage with levels either zero or + Vdc. It is known as two level inverter. To obtain a quality output voltage waveform with a minimum amount of ripple content, they require high switching frequency along with various pulse-width modulation strategies. In high power medium voltage applications, these two-level inverters have some limitations in operating at high frequency mainly due to switching losses and constraints of device rating. The dc link voltage of a two-level inverter is limited by voltage ratings of switching devices, the problematic series connection of switching devices is required to raise the dc link voltage. The two level inverters generate high frequency common-mode voltage within the motor windings which may result in motor and drive application problem [14].

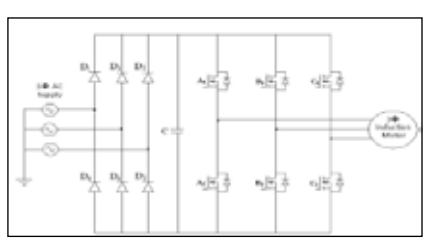

Fig. 1 Two level inverter

From the aspect of harmonic reduction and high dc-link voltage level, five level approaches seem to be the most promising alternative. The harmonic content of a five level inverter is less than that of a two-level inverter at the same switching frequency [14]. A five level inverter will generate lower common mode voltages compared to two level inverter. So, the five-level inverter topology is generally used in realizing the high performance medium voltage drive systems.

III. DRIVE SYSTEM DESCRIPTION

In the conventional technique normal PWM method is used. So that the voltage and current is of poor qualities and the switching frequency causes more amount of switching losses. Those drawbacks are rectified using three phase cascaded h-bridge multilevel inverter. The voltage and current qualities are better and the switching losses are reduced when compared to the conventional technique. Also the THD is found to be better.

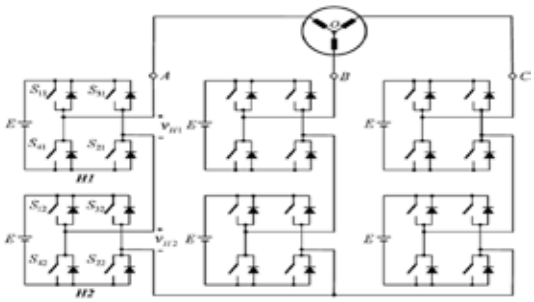

Fig.2 Multilevel inverter based drive circuit

The three phase five level cascaded h-bridge voltage source inverter is shown in fig.2.Each dc source is connected to an inverter. Each inverter level can generate three different voltage outputs, +Vdc, 0, and –Vdc using various combinations of the four switches. The ac outputs of the different full bridge inverter levels are connected in series such that the synthesized voltage waveform is the sum of the inverter outputs. Table 1 shows the voltage levels and their corresponding switching states.

Table 1 Voltage Level and Switching State of the Five-level CHB Inverter

Output Voltage Van	S11	S31	S12	S32	Vh1	Vh2
2E	1	0	1	0	E	E
E	1	0	1	1	E	0
	1	0	0	0	E	0
	1	1	1	0	0	E
	0	0	1	0	0	E
0	0	0	0	0	0	0
	0	0	1	1	0	0
	1	1	0	0	0	0
	1	1	1	1	0	0
	1	0	0	1	E	-E
	0	1	1	0	-E	E
-E	0	1	1	1	-E	0
	0	1	0	0	-E	0
	1	1	0	1	0	-E
	0	0	0	1	0	-E
-2E	0	1	0	1	-E	-E

IV. MODULATION STRATEGY

This paper mainly focuses on multicarrier PWM method. This method is simple and more flexible than SVM methods. If an n-level inverter is employed, n-1 carriers will be needed. The carriers have the same frequency fcr and the same peak to peak amplitude Vcr. The modulating signal is a sinusoidal of frequency fm and amplitude Vm. In this proposed scheme phase sifted modulation scheme is used. For five level triangular carriers required M-1=4 where m= voltage level. There is a phase shift between any two adjacent carrier waves, given by [14]

Øcr =360°/ (m–1)
Here Øcr =360°/ 4
Øcr =90°

The principle of the phase shifted modulation for a five-level CHB inverter, where four triangular carriers are required with a 90° phase displacement between any two adjacent carriers. Comparison of carrier and modulating waves and gate pulses for upper switches are shown in fig. 3.

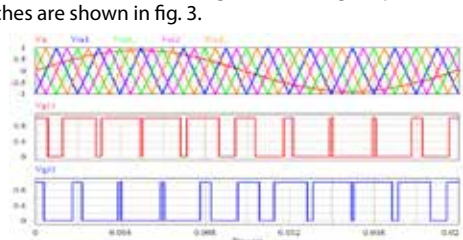

Fig. 3 Simulated waveforms of carrier and modulating waves. Gate Pulses of upper switches for phase shifted modulation

V. V/F CONTROL THEORY

In this type of control, the motor is fed with variable frequency signals generated by the PWM control from an inverter. Here the V/f ratio is maintained constant in order to get constant torque over the entire operating range. Since only magnitudes of the input variable-frequency and voltage are controlled, this is known as "Scalar Control". Generally, the drives with such a control are without any feedback devices (open-loop control). Hence a control of this type offers low cost and is an easy to implement solution.

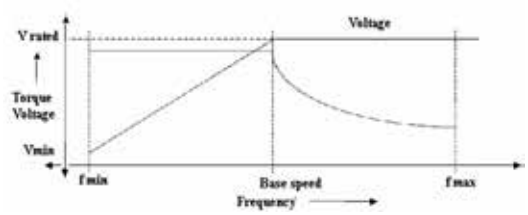

Fig. 4 Speed-Torque characteristics with V/f control

Fig. 4 shows the relation between the voltage and torque versus frequency. The voltage and frequency being increased up to the base speed. At base speed, the voltage and frequency reach the rated values. We can drive the motor beyond base speed by increasing the frequency further. But the voltage applied cannot be increased beyond the rated voltage [8]. Therefore, only the frequency can be increased, which results in the field weakening and the torque available being reduced.

VI SIMULATED CIRCUIT AND WAVEFORM

Fig. 5 shows the simulation circuit for five level cascaded h- bridge multilevel inverter.

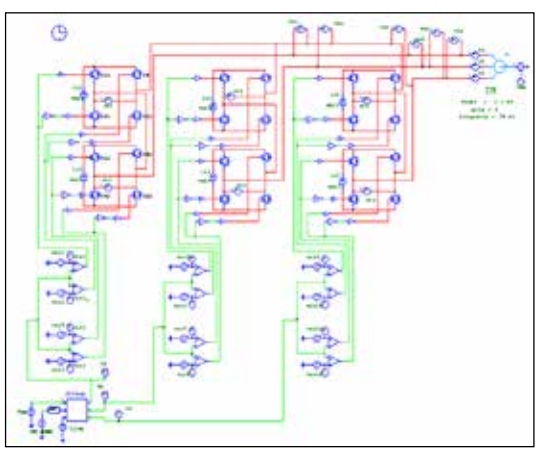

Fig. 5 Simulated circuit for five level CHB Multilevel Inverter

Output line voltage waveforms for 50 Hz frequency are shown in fig. 6.

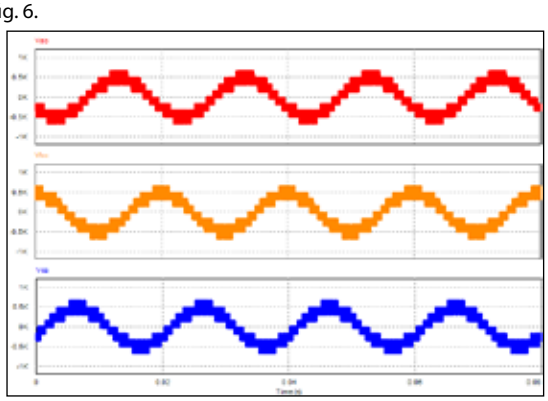

Fig. 6 line voltage for 50 Hz Frequency

Speed- Torque curves for 50 Hz frequency are shown in fig. 7.

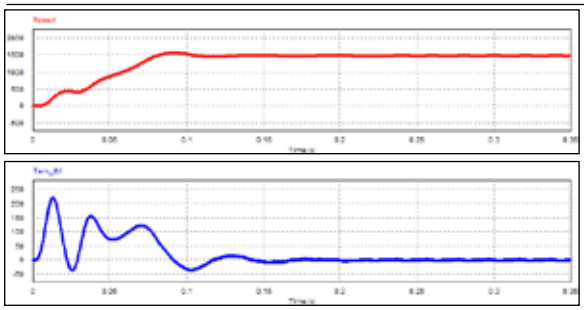

Fig. 7 N-T Curves for 50 Hz frequency

The harmonic spectrum for line voltage is shown in fig. 8. The spectrum shows that the harmonic content present in the line voltage is very low compare to conventional inverter.

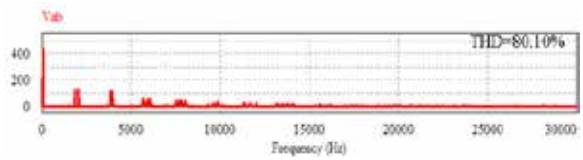

Fig. 8a Harmonic spectrum for conventional inverter

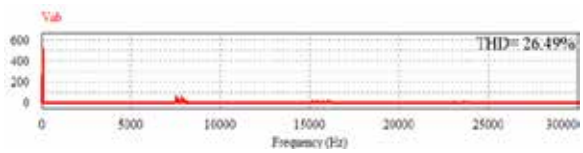

Fig. 8b Harmonic spectrum for five level inverter

The frequency of reference signal determines the inverter output frequency, and its peak amplitude controls the modulation index. The variation in modulation index changes the rms output voltage of the multilevel inverter. By varying the reference signal frequency as well as modulation index, the speed of an induction motor gets controlled.

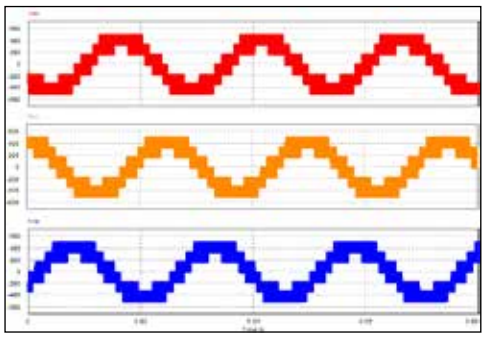

Fig 9 line voltage for 40 Hz Frequency

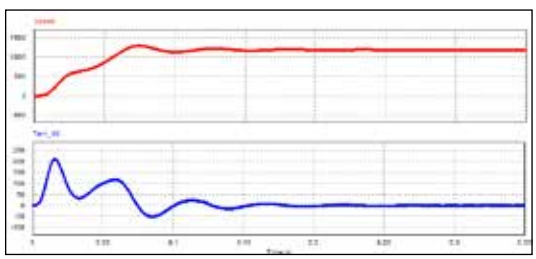

Fig 10 N-T Curves for 40 Hz frequency

The speed- torque curves conclude that the voltage and frequency applied to the motor gets decreased, and then the speed of an induction motor also gets decreases simultaneously.

VII CONCLUSION

In this paper five-level cascaded h-bridge multilevel inverter has been presented for drive applications. The multicarrier phase shifted SPWM technique can be implemented for producing low harmonic contents in the output; hence the high quality output voltage was obtained. The open loop speed control was achieved by maintaining V/f ratio at constant value. The simulation results show that the proposed system effectively controls the motor speed and enhances the drive performance through reduction in total harmonic distortion (THD). This drive system can be used for variable speed applications like conveyors, rolling mills, printing machines etc.

REFERENCES

[1] J. Rodriguez, J.S.Lai and F.Z.Peng, "Multilevel inverters: A survey of topologies, controls and applications," IEEE Trans. Ind. Electron., vol. 49, pp. 724-738, Aug. 2002. [2] Dr.Rama Reddy and G.Pandian, "Implementation of Multilevel inverter fed Induction motor Drive," Journal of Industrial Technology, vol 24, no. 1, April 2008. [3] M. Malinowski, K. Gopakumar, J. Rodriguez and M. A. Perez, "A Survey on Cascaded Multilevel Inverters", IEEE Trans. Ind. Electron., vol. 57, NO. 7, pp. 2197-2206, July-2010. [4] S. Kouro, M. Malinowski, K. Gopakumar and J. Pou, L. G. Franquelo, Bin Wu, J. Rodriguez " Recent Advances and Industrial Applications of Multilevel Converters", IEEE Trans. Ind. Electron., vol. 57, NO. 8, pp. 2553-2580, August-2010. [5] Ahmad Radan and Zahra Daneshi Far, "Optimized Opportunities in Carrier-Based Multilevel PWM Using Degrees of Freedom of Modulation [6] Mr. C.S. Kamble, Prof. J.G.Chaudhari, Dr. M.V.Aware, "Digital Signal Processor Based V/f Controlled Induction motor Drive" 3 rd ICET in Engg. and Tech. pp. 345-349 [7] Mineo Tsuji, Shuo chen, Shin-ichi Hamasaki,X. Zaho and E.Yamada, "A Novel V/f control of Induction Motors for wide and precise speed operation", ISPE,SPEEDAM 2008 [8] Mr. S. E. Pravin and Ms. R. N. Star bell , " Induction Motor Drive using Seven Level Multilevel Inverter for Energy Saving in Variable Torque Load Application" ICCCET-2011, 18th & 19th March, 2011,pp. 352-357 [9] Jutarat Pongpant, S. Po-ngam, M.Konghirun,"The performance improvement of constant V/f control of Induction motor Drive in low speed range" IEEE 2006 [10] P. Hothongkham and V.Kinnares, "Investigation into Harmonic losses in a PWM Multilevel cascaded H-Bridge Inverter Fed Induction Motor", PEDS-2007, pp. 1043-1048 [11] S. Malik and D. Kluge, "ACS 7000 world's first standard ac drive for Medium-voltage applications,"ABB Rev., no. 2, pp. 4-112006 [12] Samir Kouro, Jaime Rebolledo and J.Rodriguez, "Reduced Switching Frequency Modulation Algorithm for High- Power Multilevel Inverter," IEEE Trans on Industrial Electronics, vol54, no.5, Oct 2007. [13] Xianglian Xu, Yunping Zou, Kai Ding, and Fei Liu," Cascade multilevel inverter with Phase-Shift SPWM and its application in STATCOM" Proceedings of the 30th Annual Conference of the IEEE Industrial Electronics Society, November 2 - 6,2004, Busan, Korea. [14] B. Wu, "High-Power Converters and AC Drives", New York: Willey-IEEE Press, Mar. 2006.