Volume : 2 | Issue : 11 | Nov 2013 • ISSN No 2277 - 8160

Research Paper | Engineering

Soil Analyzerbot with Localization

Vas anthkumar. ch — 2nd M.Tech Robotics, School of Mechanical Engineering, SRM University, Kancheepuram Dt,pincode- 603 203.

Satheesh Kumar .V — 2nd M.Tech Robotics, School Of Mechanical Engineering, SRM University- Kancheepuram Dt,pincode- 603 203.

ABSTRACT

Sub-surface soil contains essential nutrients which help s in p rop er growth of a p lant, analysis of these nutrients along with the relative humidity is essential for the p re p lantations for any agricultural crop .

The design criteria of this p roject involve the localization of the robot for samp ling using visual methods and there by controlling the robot p osition accordingly . This p roject also involves continuous transfer of the analy zed soil samp le at various location of the land usin g wireless communication channel.

The p roject incorp orates the storage and retrieval of the samp le data for future usage with data security using higher encry ption and decryp tion with auto backup .

KEYWORDS : — Regolith, Raspberry pi, Cmos sensors, Auger,python code

I. Introduction

Unmanned soil sampling and subsurface explorations have received a lot of attention in recent years. For estimation of the yield of a crop it is required to perform sampling, conduct in- situ analysis of geological soil samples and deploy devices for measurement and sampling. Many researchers have studied and developed sample acquis ition systems and driller or corer systems. Recently deep drillers or penetrating systems have been required to obtain deep data for s ubsurface explorat ion of soils. In exploration process, it is needed to excavate the regolith layer. This paper is structured as follows. Section 2 describes the requirements , the problems , and the concept of auger robot for subsurface drilling. In Section 3, a new mechanis m for drilling and material transfer in robot, Section 4 discusses the feasibility of the proposed scheme localization of the robot using the extended kalman filtering algorithm. In Section 5, describes the driver mechanism modeling and feasibility in the project Section 6 describes the block diagram of the system.

II. Soil sampling

A. Problem in Excavation:

This paper deals with the regolith layer that is said to cover the soil s urface at least 1[ft] in depth.

Because of its extremely high filling factor, it is hard to make space by compressing. There are also constraints on the system weight and energy. The reactive forces are also considered in this project which is very much required to act against these forces while drilling and material transfer operations.

The sampling locations should be feed into the system through the keyboard interface to the Raspberry pi development board.

B. Requirements for sampling and The proposed exploration system has the following features.

1. The robot can drill and transfer material that is being drilled by us ing auger mechanism
2. The robot is capable of carrying the auger mechanis m and material transfer, analyzer box.
3. The robot has enough autonomy to locate itself by the means of the GPS and movement can be controllable on its own by means of encoder feedback mechanis m.
4. Robot is capable of analyzing the sampled soil to the maximu m extent possible and also capable of sending the data analyzed to a remote station through the RF zigbee module.

III. Drilling and material transfer:

The design equations that govern the material transfer and the size of the auger system are as follows

$q(x+\Delta x)=q(x)+v\Delta A$ ---------1

$=q(x)+(v.r.\ \Delta x)$.

$q(x+\Delta x)- q(x)/\ \Delta x=v.W$ -------2

q= transfer rate at a distance =(x+Δx)

x= distance along the auger

Δx= incremental distance along the auger

W= width of the tube through discharge happens

r = radius of the tube.

D = outer dia of the auger d = inner dia of the auger

ω=angular velocity.

P= pitch of the auger.

X = length of the auger

V=velocity of material transfer

$$d=\sqrt{d^2 - 4vD.x/(\pi.\omega.P)} \quad \text{----------3}$$

$$P=\sqrt{\frac{4.v.D.x}{(\pi.\omega(D^2-d^2}} \quad \text{----------4}$$

$$D=\sqrt{d^2 - (4.v.w.x/(\omega.P)} \quad \text{----------5}$$

$d/dx(q(x))=d/dx(D2-(d(x))2.\ \omega.P$ --------6

$q(x)=\pi/4(D-d(x)2)\ \omega.P$ ----------7

IV. Localization of robot:

Localization of the robot is carried out by the extended Kalman filter concept which is shown below

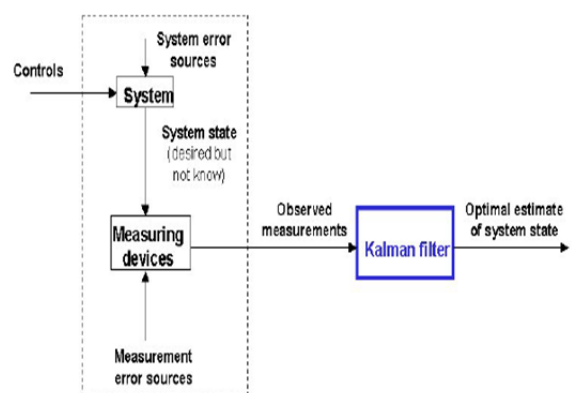

The general filtering problem may formu lated along the following lines.

x(k + 1) = f(x(k), u(k), w(k)) --------[D1]

y(k) = h(x(k), v(k)) ----------[D2]

be the state dynamics of a general non-linear time-varying system, where

x Ɛ Rn is the systemstate vector,

f(., ., .) defines thesystem's dynamics,

u ƐRm is the control vector,

•w is the vector that conveys thesystemerror sources,

y ƐRr is the observation vector,

h(., ., .) is the measurement function,

•v is the vector that represents the measurement error sources.

f, h, the noise characterization, the initial conditions,

- the set of controls, u(0), u(1), . . . , u(k – 1),

For the s et of meas urements , y(1), y(1), y(2), . . . , y(k),

the bes t estimate of x(k)

Taking a Bayes ian viewpoint, the filter propagates the conditional probability density function of the des ired quantities , conditioned on the knowledge of the actual data coming fro m the meas uring devices , i.e., the filter evaluates and propagates the conditional pdf

p(x(k)|y(1),. . . , y(k), u(0), . . . , u(k – 1)----------[D3]. for increasing values of k.

This data conveys the amount of certainty on the knowledge of the value of x(k).

Consider that, for a given time ins tant k, the s equence of past inputs and the s equence of past meas urements are denoted by1

Uk–1

0 = {u0, u1, . . . , uk–1} ----------[D4]

Y k

1 = {y1, y2, . . . , yk}. ----------[D5]

From the above mentioned equations we can estimate the next pos ition of the robot location as well as the location to be sampled in any given environment.

V. Drivermechanism

Due to the los ses in the field control of the DC motor armature motor control is preferable. Where all the para meters are more or les s rema ins the s ame but the voltage and current which are controlled by us ing the PWM s ignal through the ras pberry pi.

$$T = K \times f \times I_a$$

F= flux density

Ia = armature current

Tis the torque

Va is armature voltage

Ra is the armature resistance

Kb is the back emf constant

La is the inductance of the armature coil

The torque can be controlled us ing the current and the frequency control using the Raspberry Pi.

C. Block diagram of the system:

The block diagram the system comprises of the Raspberry pi development board to which the sensor assembly, the auger driver mechanis m, the video camera, the locomotive mechanis m for the robot are integrated and connected us ing the driver circuitry. Bas ed on the location of the robot, it aligns itself to that particular location based

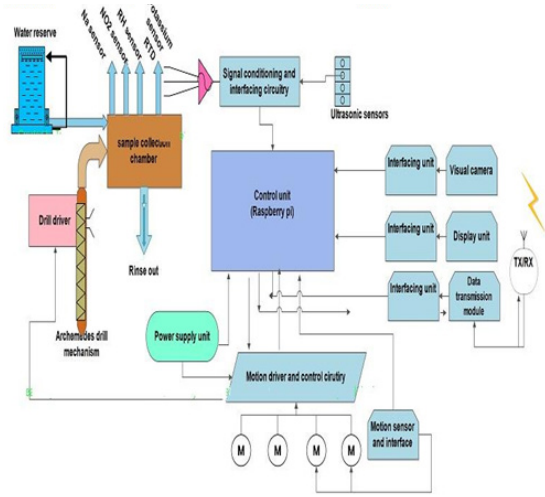

On the location provided by the GPS device connected to it. Once the location is defined the robot starts drilling the soil sample using the auger mechanism fitted to it and extracts the soil sample into the analyzer box which is incorporated with the sensor arrays which provides the data about the sample that has been transferred to the box.

D. Solid works model:

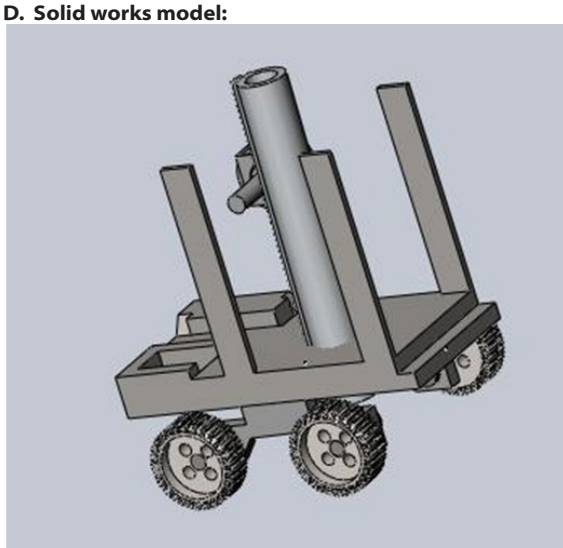

conclusion

This paper has presented an auger-type robot for soil subsurface sampling and analyzing. This paper proposed the mechanism for forward movement of the robot making use of kalman filter. The discharging mechanis m and the carrying mechanis m were also developed and are under test. The feas ibility of the propos ed method was confirmed by the analys es and s ome e xperiments on each component part. The integrated cons truction and the demons tration of the propos ed method by drilling e xperiments are undergoing. This res earch was partially s upported by NGRI, Grant in aid for young s cientis ts .

REFERENCES

[1] An automated sampling s oil reduction-oxygenation RF | s ensor network for cerea l crop management | Michael Co llins , Chris Holme, Keng T. Tan, Me mber, IEEE | Le is a Arms trong School of Co mputer and Information Science | Edith Cowan Univers ity Mount Lawley WA 6050 | Western Australia. 1-4244-0549-1/06 (2006 IEEE.) [2] E.Borns chlegl, G.Hirzinger, M.Maurette, R.Mugnuolo, G.Vis entin, "Space Robotics in Europe, | a Co mpendium," Proceeding of the 7th International | Sympos ium on Artific ial Intelligence and Robotics | & Automation in Space, 2003. | [3] I.Nakatani, K.Mats umoto, T.Izumi, "SELENE-B: Propos ed Lunar Mis s ion with Lander and Rover," Proceeding of the 7th International Sympos ium on | Artific ial Intelligence and Robotics & Automation in | Space, 2003. | [4] M.V.Winnendael, G.Vis entin, R.Bertrand, R.Rieder "Nanokhod Microrover Heading Towards Mars ," Proceeding of the 5th International Sympos ium on Artific ial Intelligence and Robotics & Automation in | Space, 1999. | [5] T.Huntsberger, Y.Cheng, E.T.Bau mgartner, M.Robins on, P.S.Schenker, "Sens ory Fus ion for Planetary Surface Robotic Navigation, Rendezvous , and Manipulation Operations ," Proceedings of the | 11th International Conference on Advanced Robotic, | 2003, pp.1417-1423. | [6] K.Yos hida, Y.Nis himaki, T .Maruki, T.Kubota, H.Yano, "Sa mp ling and Surface Exp loration Strategies in MUSES-C and Future As teroid | Mis s ions ," Proceeding of the 7th International | Sympos ium on Artific ial Intelligence and Robotics | & Automation in Space, 2003. | [7] S.Sherrit, Y.B.Cohen, B.P.Dolgin, N.Bridges , X.Bao, Z.Chang, A.Yen, R.S.Saunders , R.A.Ra inen, | S.F.Daws on, "Samp le Acquis ition and In -Situ Analys is Us ing the Ultras onic/Sonic Drille r/ Corer(UDSC) and Robotic Platforms ," Proceeding of the 6th International Sy mpos ium on Artific ial | Intelligence and Robotics & Automation in Space, | 2001. |