GLOBAL RESEARCH ANALYSIS

ISSN No 2277 - 8160

Listed & Indexed with

ISSN Directory, Paris



Multi-Subject Journal

Volume : 1 | Issue : 1 | June 2012 | ₹ 250/-

GLOBAL RESEARCH ANALYSIS

ISSN No 2277 - 8160

GLOBAL RESEARCH ANALYSIS

Editor In-Chief :

Dr. Khansa Memon
SARA Publishing Academy

Dr. Ashok S. Pawar Associate Professor, Dept. of Economic Dr. Babaasaheb Ambedkar Marathwada.University, Aurngabad.(MS-India)-431004	**Dr.(Prof) Vijay Kumar Soni** Principal, Jai Meenesh College, Phagi, Jaipur, Rajasthan	**Dr. A.R. Saravankumar** Assistant Professor in Education DDE, Alagappa University, Tamilnadu
Dr. R. Ramachandran Commerce DDE Annamalai University Tamilna	**Dr. R Ganpathy** Assistant Professor in Commerce Directorate of Distance Education Alagappa University Karaikudi.	**Dr. Amit Bandyopadhyay** Assistant Professor Department of Physiology University of Calcutta
Dr. V. Kumaravel Professor and Head Vivekanandha Business School for Women Tiruchengode, Namakkal Dist	**Dr. K. Prabhakar** Professor, Department of Management Studies, Velammal Engineering College, Chennai - 600 066.	**Dr. Sunita J. Rathod** Maharashtra Education Service Group-B DIET Dist. Jalna

SUBSCRIPTION DETAILS

Period	Rate	Discount	Amount Payable
One Year (12 issues)	3000/-	Nil	3000/-
Two Years (24 issues)	6000/-	200/-	5800/-
Three Years (36 issues)	9000/-	300/-	8700/-
Five Years (60 issues)	15000/-	600/-	14400/-

You can download the Subscription form from website www.theglobaljournals.com. You will require to print the form. Please fill the form completely and send it to the Editor, GLOBAL RESEARCH ANALYSIS along with the payment in the form of Demand Draft/Cheque at Par drawn in favour of GLOBAL RESEARCH ANALYSIS payable at Ahmedabad.

- Thoughts, language, vision and examples in published research paper are entirely of author of research paper. It is not necessary that both the editor, and editorial board agrees with the author. The responsibility of the matter of research paper/article is entirely of author.
- Editing of the Global Research Analysis is processed without any remittance. The selection and publication is done after recommendations of atleast two subject expert referees.
- In any condition if any National/International University denies accepting the research paper published in GRA, then it is not the responsibility of Editor, Publisher and Management
- Only the first author is entitle to receive the copies of all co-authors
- Before re-use of published paper in any manner, it is compulsory to take written permission from the Editor-GRA unless it will be assumed as disobedience of copyright rules
- All the legal undertaking related to Global Research Analysis is subject to Ahmedabad Jurisdiction.
- The research journal will be send by normal post. If the journal is not received by the author of research paper then it will not be the responsibility of the Editor and publisher. The amount for registered post should be borne by author of the research paper in case of second copy of the journal.

Editor,
GLOBAL RESEARCH ANALYSIS
3, SUHANA, Near. Ruby Apartment, B/h NID, Rajnagar Road, Paldi Ahmedabad – 380007. Gujarat (INDIA)
Cell : +91 98247 02127, 8866 00 3636

INDEX

Sr. No.	Title	Author	Subject	Page No.
1	Vat And Accounting and Emerging Financial Services	Dr.Kishor V. Bhesaniya	Accountancy	1-2
2	Regulations for Alternative Investment Funds – A Primer	Dr. Bheemanagouda	Commerce	3-4
3	Financial Inclusion in India: A Real Effort for Growth	Dr. Jyotindra M. Jani, Manish B. Raval	Commerce	5-6
4	Tourism Industry and Medical Tourism in India – An Analysis	Dr. M. K. Maru	Commerce	7-8
5	Enhancing Supply Chain Performance through Effective Transportation	Dr. Vipul Chalotra	Commerce	9-10
6	Growth of Consumer Co-Operatives in J&K- A Study	Tarsem Lal	Commerce	11-12
7	Uses of College Funds in Assam-With Reference to Lakhimpur District	Dr. Niranjan Kakati	Commerce	13-14
8	LIC –A Modle Employer	Dr.J.K.Sehgal	Commerce	15-16
9	A study of the use of Information technology enabled banking services by Indian Customers	Dr Sunny Thomas, MsWaheeda Sheikh	Economics	17-18
10	The Role of Women Entrepreneurs in The Emerging Economic Force	Dr.Sangappa.V. Mamanshetty	Economics	19-21
11	Trade-off Between Inflation and Unemployment for BRICS Countries – Dead or Alive?	Krunal K Bhuva, Ashok R. Bantwa	Economics	22-23
12	Urbanisation and its Impact on Poverty	Dr. K.J. Thankachan, Mrs. Nazia Ansari	Economics	24-25
13	Food Security- Issues and Concerns	Munisha Gaur	Economics	26-27
14	Teaching Strategies : A Model Approach	Dr. Mujibul Hasan Siddiqui	Education	28-29
15	School Curriculum in Terms of Life Skills and its Implications for Teacher Education	Ramesh B. Sakhiya	Education	30-31
16	Edge Detection using live video acquisition	Patel Janakkumar Baldevbhai, R.S. Anand, Patel Nilam J.	Engineering	32-34
17	Topological Characteristics of Dynamics of Heart in Various Pathological Cases using Lyapunov Exponent and RBF Network	Abinash Dahal, Deepashree Devaraj, Dr. N. Pradhan	Engineering	35-37
18	Implementation of Digital Logic Method for Selection of Material of Automotive Brake Disc	Mr. Keval J. patel, Tushar M. Patel, Ankit A. Darji	Engineering	38-40
19	Initial and after Market Performance of Indian IPOs	Dr. Ashvin H. Solanki	Finance	41-43
20	Facilitation of Collateral Free Loan to Improve Financial Linkages For Start Up & Growth – A Case Study	D M Parikh	Finance	44-46
21	Impact of Maternal Nutrition Education Module on Nutritional Knowledge And Status in Rural Pregnant Women	Dr. Anjali A. Rajwade	Home Science	47-49
22	Trends and Challenges in Indian Insurance Industry	Dr Mahalaxmi Krishnan	Insurance	50-51
23	(Raksha Patrakarita : Dayra Badhae Media Sansthan)	Dr. Subodh Kumar	Journalism	52-53
24	NATIONAL WAGE POLICY VIZ-A-VIZ CORRELATION BETWEEN WAGES, PRICE AND TAX	Manish Parshuram Pawar, Dr. Ashok Shankarrao Pawar	Law	54-55

Sr. No.	Title	Author	Subject	Page No.
25	Shobha De's treatment of sex in Starry Nights	Chetan J. Marakana	Literature	56
26	A Catalyst to Promote Teaching and Learning English Grammar	Elsamma Sebastian	Literature	57-58
27	A Study on Effectiveness of Employee Training in Health Care Industry in a Private Multi-Speciality Organization	Dr C Swarnalatha, TS Prasanna	Management	59-61
28	Insights in to the Tomorrow Retailing in India: A Point of View and Method	Anuradha Averineni	Management	62-63
29	A Study on the Excellence of Worklife Among the Employees of it Sector in Coimbatore	G. Murali Manokari, R.Kanaka Rathinam	Management	64-65
30	Socio Cultural Issues in Marketing	Kavita A. Trivedi	Management	66-67
31	Organised Multi Brand Retailing: Opportunity For Sustainable Development	Rachita Sambyal	Management	68-69
32	Investors Perception for Mutual Fund Investment in 21st Century	Dr. Deepak H. Tekwani	Management	70-71
33	FDI in India	Dr. M Venkata Subba Reddy, Mr.udaya Banu	Management	72-73
34	Global Crisis and Indian Economy, A Comparative Analysis with World Economy	Dr. Pankaj K. Trivedi	Management	74-76
35	Practical Utility of Intellectual Capital Approach-A Critical Analysis	Dr. Shilpa Trivedi	Management	77-78
36	An In-depth study of Consumer Preference towards Personal Care Products	Dr.Sharif Memon	Management	79-81
37	Consumer Awareness and Preferences towards Ayurvedic Cosmetic Products in Coimbatore City	Mrs. B. Menaka, Dr. T. Ramasamy, Dr. R. Ganapathi	Management	82-90
38	Miracle combination of five herbs Methi, Kalongi, saunf, jeera and Rai	Dr. Sneh Harshendra Sharma	Management	91-93
39	Social Marketing: Towards a new horizon	Dr Partha Sarkar	Marketing	94-95
40	Epidemiological Transition and Emerging Conflicts in Health Care	Dr. Pawan Kumar, Dr. Abdul Majeed Khan	Public Health	96-97
41	Knowledge, Attitude and Practice of Reproductive Health Care Services among the Members and Non-members of Self Help Groups (SHGs)	Dr.K.Jothy	Social Sciences	98-100

Volume : 1 | Issue : 1 | June 2012 • ISSN No 2277 - 8160

Research Paper | Engineering

Topological Characteristics of Dynamics of Heart in Various Pathological Cases using Lyapunov Exponent and RBF Network

Abinash Dahal #41/1, Opp Mohan Stores, 3RD Cross, Nagasandra, Bangalore

Deepashree Devaraj

Dr. N. Pradhan

ABSTRACT

The electrocardiogram (ECG) signal is the recording of the bioelectrical activities of the cardiac system. It provides valuable information about the functional aspects of the heart and cardiovascular system. Early detection of heart diseases/abnormalities can prolong life and enhance the quality of living through appropriate treatment. Due to large number of patients in intensive care units and the need for continuous observation of such conditions, several techniques for automated electrocardiographic changes detection have been developed in the past ten years to attempt to solve this problem. Such techniques work by transforming the mostly qualitative diagnostic criteria into a more objective quantitative signal feature classification problem.

KEYWORDS: ECG, Lyapunov Exponents, RBF Network

1. INTRODUCTION

Electrocardiography is an important tool in diagnosing the condition of the heart. Cardiac health care is the fastest growing market as cardiovascular disease is the leading cause of death in the world. Among the various medical or healthcare information, ECG is the best way to measure and diagnose abnormal conditions of heart. The electrocardiogram (ECG) signal is the recording of the bioelectrical activities of the cardiac system. It provides valuable information about the functional aspects of the heart and cardiovascular system.

Due to large number of patients in intensive care units and the need for continuous observation of such conditions, several techniques for automated electro-cardiographic changes detection have been developed in the past 10 years to attempt to solve this problem. The analysis of the ECG signals for detection of electrocardiographic changes has been performed by using the autocorrelation function[1], frequency domain features, time frequency analysis[2], and wavelet[3] transform. There are several other techniques under research in the field of automated classification [9] [12] [14].

The objective of the present study in the field of automated diagnosis of heart diseases/abnormalities is to extract the representative morphological features of the ECG signals (normal beat, congestive heart failure beat, ventricular tachyarrhythmia beat, atrial fibrillation beat) obtained from the PhysioBank database and to present the accurate classification model. As in traditional pattern recognition systems, the model consists of three main modules: a feature extractor that generates a feature vector from the raw ECG signals, feature selection that composes feature vectors (Lyapunov exponents), and a feature classifier that outputs the class based on the feature vectors (Radial Basis Function Network – RBF). A significant contribution of the present work is the composition of feature vectors from selected Lyapunov exponents which are used to train novel classifier (RBF Network trained on computed Lyapunov exponents) for the ECG signals. The basic block diagram of the study is as given in figure 1.

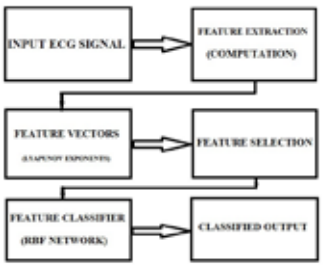

Fig.1 Block Diagram of Proposed Study.

2. DATA DESCRIPTION

PhysioBank database is a large and growing archive of well-characterized digital recordings of physiologic signals and related data for use by the biomedical research community. PhysioBank currently includes databases of multiparameter cardiopulmonary, neural, and other biomedical signals from healthy subjects and patients.

The waveforms of four different ECG beats (normal beat, congestive heart failure beat, ventricular tachyarrhythmia beat, atrial fibrillation beat) considered in the present study are shown in Fig. 2(a-d). The ECG signal examples (normal beat, congestive heart failure beat, ventricular tachyarrhythmia beat, atrial fibrillation beat) are presented in Fig. 3(a–d).

3. MATERIALS AND METHODS.

Decision making was performed in two stages: feature extraction by computing Lyapunov exponents and classification using the selected Lyapunov exponents as inputs of the RNNs. The basic block diagram is as shown in fig.1.

3.1 Lyapunov Exponents

Numerous methods for calculating the Lyapunov exponents have been developed during the past decade. In the present study,

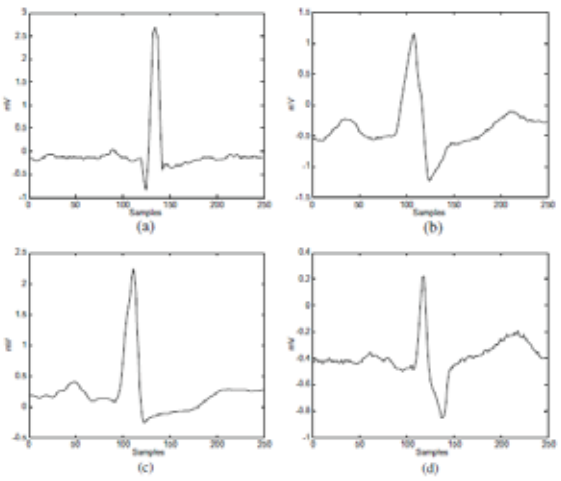

Fig.2 Waveforms of the ECG beats (a) normal beat, (b) congestive heart failure beat, (c) ventricular tachyarrhythmia beat and (d) atrial fibrillation beat.

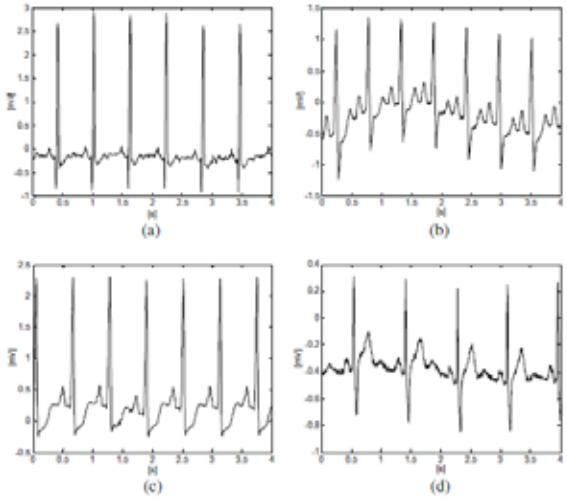

beat, (c) ventricular tachyarrhythmia beat and (d) atrial fibrillation beat.

the Lyapunov exponents are estimated from the observed time series. Lyapunov exponents are a quantitative measure for distinguishing among the various types of orbits based upon their sensitive dependence on the initial conditions, and are used to determine the stability of any steady-state behavior, including chaotic solutions [10] [12]. The reason why chaotic systems show aperiodic dynamics is that phase space trajectories that have nearly identical initial states will separate from each other at an exponentially increasing rate captured by the so-called Lyapunov exponent.

Consider two (usually the nearest) neighboring points in phase space at time 0 and at time t, distances of the points in the i-th direction being ||δxi(0)|| and ||δxi(t)||, respectively. The Lyapunov exponent is then defined by the average growth rate λi of the initial distance,

$$\frac{\|\delta x_i(t)\|}{\|\delta x_i(0)\|} = 2_i^2 t(t \to \infty) \text{ or } \lambda_i = \lim_{t\to\infty} \frac{1}{t} \log_2 \frac{\|\delta x_i(t)\|}{\|\delta x_i(0)\|}$$

The existence of a positive Lyapunov exponent indicates chaos. Generally, Lyapunov exponents can be extracted from observed signals in two different ways. The first is based on the idea of following the time-evolution of nearby points in the state space. This method provides an estimation of the largest Lyapunov exponent only. The second method is based on the estimation of local Jacobi matrices and is capable of estimating all the Lyapunov exponents. Vectors of all the Lyapunov exponents for particular systems are often called their Lyapunov spectra.

3.2 Radial Basis Function Network

Radial Basis Function (RBF) Network can perform highly non-linear dynamic mappings and thus have temporally extended applications, whereas multilayer feedforward networks are confined to performing static mappings. RBF networks have been used in a number of interesting applications including associative memories, spatiotemporal pattern classification, control, optimization, forecasting and generalization of pattern sequences.

RBF networks use unconstrained fully interconnected architectures and learning algorithms that can deal with time-varying input and/or output in non-trivial ways [9]. The RBF allows the network to remember cues from the past without complicating the learning excessively.

An RBF network is a network which in principle is set up as a regular feedforward network. This means that all neurons in one layer are connected with all neurons in the next layer. An exception is the so-called context layer which is a special case of a hidden layer. Fig. 4 shows the architecture of an RBF network. The neurons in the context layer (context neurons) hold a copy of the output of the hidden neurons. The output of each hidden neuron is copied into a specific neuron in the context layer. The value of the context neuron is used as an extra input signal for all the neurons in the hidden layer one time step later. Therefore, the RBF network has an explicit memory of one time lag.

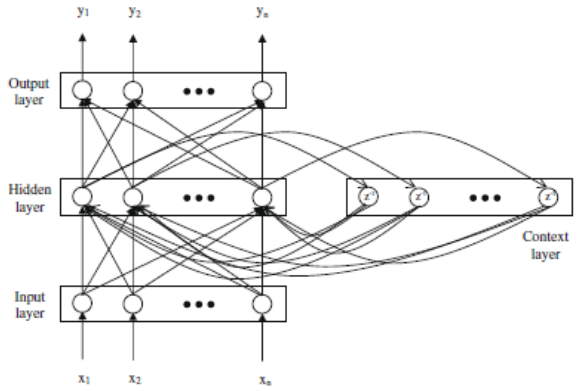

Fig.4 A schematic representation of RBF network.Z-1 represents a one time step delay unit.

4. RESULTS

In this study of automated classification of ECG signals, the Lyapunov Exponent has been calculated from the signals obtained from the Pshysionet database. The fig 5 shows some of the results. These exponents are used to train the RBF Network for the classification of the ECG signals.

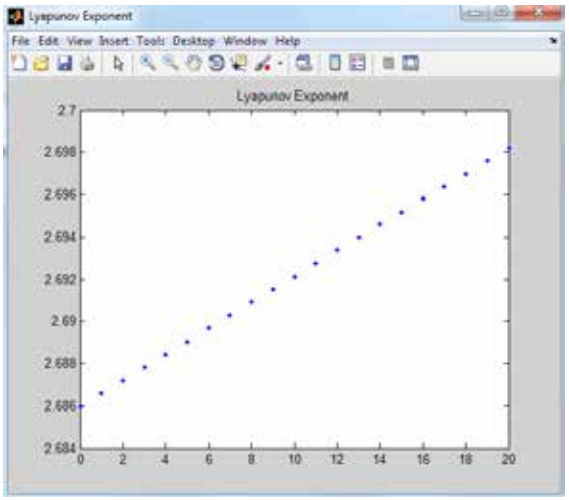

Fig 5(a). Normal Beat.

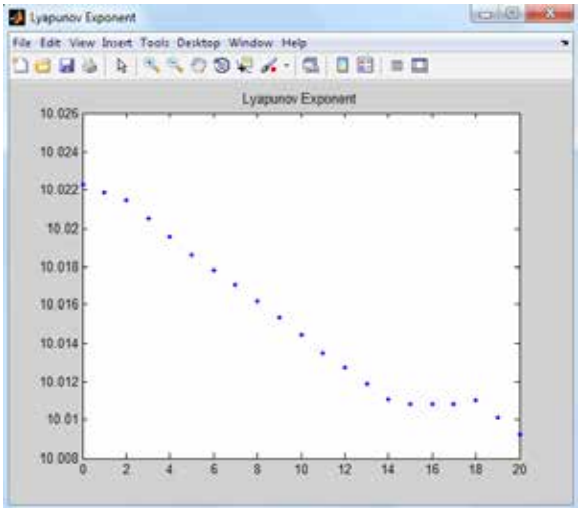

Fig 5(b). Congestive Heart Failure Beat.

Fig. 5. Lyapunov Exponents of the ECG beats.

TABLE I

Normal Beat	1.8816	1.8815	1.8817	1.8813
Congestive Heart Failure Beat.	0.0014	0.0013	0.0017	0.0015
Ventricular Tachyarrhythmia Beat	-0.043	-0.046	-0.048	-0.047
Atrial Fibrillation Beat	0.0021	0.0019	0.0023	0.0020

Table I: The extracted features of four exemplary ECG records from four classes

5. CONCLUSION

This study presents an attempt to develop a reliable computerized classifier, which can detect the abnormalities of the ECG signals. The classifier that will be used here is the RBF Network. This work is currently under progress. The pre-processing, feature extraction and RBF Network are the main modules of this study. These play an important role in automated diagnostic systems and therefore they play an important role in determining the classification accuracies.

REFERENCES

[1]. Foo, S. Y., Stuart, G., Harvey, B., & Meyer-Baese, A. (2002), Neural network-based EKG pattern recognition, Engineering Applications of Artificial Intelligence, 15, 253–260. | [2]. Kundu, M., Nasipuri, M., & Basu, D. K. (2000), Time frequency analysis, Knowledge-based ECG interpretation: A critical review. Pattern Recognition, 33, 351–373. | [3]. Ubeyli, E. D. (2008b), Implementing wavelet transform/mixture of experts network for analysis of electrocardiogram beats. Expert Systems, 25(2), 150–162. | [4]. Philip de Chazal, Member, IEEE, Maria O'Dwyer, and Richard B. Reilly, Senior Member, IEEE, Automatic Classification of Heartbeats Using ECG Morphology and Heartbeat Interval Features, VOL. 51, NO. 7, JULY 2004, pg 1196-1206. | [5]. S. Karpagachelvi, Dr. M. Arthanari, M.Sivakumar,Automatic Classification of Heartbeats Using ECG Morphology and Heartbeat Interval Features, Doctoral Research Scholar, Anna University, Coimbatore, Tamilnadu, India, Vol. 4, No. 1; January 2011. | [6]. N. Belgacem, M.A Chikh, F. Bereksi Reguig, Biomedical Engineering Laboratory, Department of Electronics, Science Engineering Faculty, Supervised Classification of ECG Using Neural Networks, Abou Bekr Belkaïd University, B.P.230, Chetouane, Tlemcen, Algeria. | [7]. Turker Ince, Serkan Kiranyaz, and Moncef Gabbouj, A Generic and Robust System for Automated Patient-Specific Classification of ECG Signals, IEEE Transactions on Biomedical Engineering, VOL. 56, NO. 5, MAY 2009, 899-906. | [8]. S. Karpagachelvi, Dr. M. Arthanari, M.Sivakumar, IJCSI International Journal of Computer Science Issues, Classification of Electrocardiogram Signals With Extreme Learning Machine and Relevance Vector Machine, Vol. 8, Issue 1, January 2011. | [9]. Prakash dixit, Dr. Sulochana Wadhawani, ME. Student, Elect. Engg. Dept. M. I. T.S, Gwalior, Madhya Pradesh. Elect. Engg. Dept. M. I. T.S, Gwalior, Madhya Pradesh, Automatic Classification of Cardiac Abnormalities Using Hermite function, International Journal of Engineering Sciences Research-IJESR, Vol 02, Issue 04; August-December 2011. | [10]. Mohamed I. Owis, Ahmed H. Abou-Zied, Study of Features Based on Nonlinear Dynamical Modeling in ECG Arrhythmia Detection and Classification, IEEE Transactions on Biomedical Engineering, VOL. 49, NO. 7, JULY 2006 pg 733-736. | [11]. E. Derya Ubeyli, Adaptive Neuro-Fuzzy Inference System for Classification of ECG Signals TOBB Ekonomi ve Teknoloji University, pg 1192–1199 (2010). | [12]. Mohamed I.Owis, Yasser M. Kadah, Robust Feature Extraction from ECG Signals Based on Nonlinear Dynamical Modeling Biomedical Engineering Dept., Cairo University, Oct 2006, pg 674-681. | [13]. Aldo Bonasera, Maide Bucolo, Mapping Heart Dynamics by using Nonlinear Indicators Moria C Virzi, IEEE EBMS, Aug 2007. | [14]. T.M. Nazmy, H. EL Messiry, B. AL Bokhity, A Stochastic Nonlinear Autoregressive Algorithm Reflects Nonlinear Dynamics of Heart-Rate Fluctuations, University of Ain Shams, Egypt, 2008. | [15]. Nahid Ghofrani, Reza Bostani, Reliable Features for an ECG-based Biometric System 17th Iranian Conference of Biomedical Engineering, Nov 2010. | [16]. Ching Kun Chen, Chung Liang Lin, Yen Ming Chiu, Individual Identification Based on Chaotic Electrocardiogram Signals, IEEE conference, 2011, pg 1771-1776. | [17]. Tapobrata Lahiri, Upendra Kumar, Hrishikesh Mishra, Subrata Sarkar and Arunava Das Roy, Indian Institute of Information Technology, Allahabad, Analysis of ECG signal by chaos principle to help automatic diagnosis of myocardial infarction, pg 866-870. |



Sara Publishing Academy
GLOBAL RESEARCH ANALYSIS
Multi-Subject Journal

Editor,
GLOBAL RESEARCH ANALYSIS
3, SUHANA, Nr. Ruby Apartment,
B/h NID, Rajnagar Circle, Paldi, Ahmedabad - 380007

Printed at Unique Offset, Novatsing Rupam Estate, Opp. Abhay Estate, Tavdipura, Shahibaug, Ahmedabad

Designed By : AdVoice Inc. +91 9824484447