RESEARCH PAPER | Engineering | Volume - 5 | Issue - 1 | Jan Special Issue - 2015 | ISSN - 2249-555X

Comparison of Economic Evaluation of Pavement Surface Maintenance by Micro Surfacing and Chip Seal.

KEYWORDS

Hitesh A. Patel | Chandresh G. Patel

Dr. P. J.Gundaliya

ABSTRACT Micro-surfacing is a cost effective polymer modified cold mix paving system that can remedy a broad range of problems on today's streets, highways and airfields. This paper presents economic evaluation of micro surfacing with chip seal for maintenance of Gozaria-Mahesana road, Gujarat state, India.The work describes review of different techniques of road maintenance on aspects of cost and also comparing estimating and costing between techniques. As output of the work best technique which can be used to perform in general course is suggested.

I. INTRODUCTION

Slurry surfacing originated in the 1930s in Germany, where it was called "micro-asphalt concrete" (ISSA 2010a). It consisted of a mixture of very fine aggregate, asphalt emulsion, and water. This technique for maintaining road surfaces started slurry surfacing development in the rest of the world. It was pioneered in Germany in the late 1960's and early 1970's. Micro-surfacing is now used throughout Europe, the United States and Australia, and is making inroads into many other areas. Micro surfacing is a relatively new technology. As such, there is great interest in assessing its efficacy as a preventive maintenance treatment. [1] Diagrametic sketch of Microsurfacing spreader machine is shown in Figure-1.

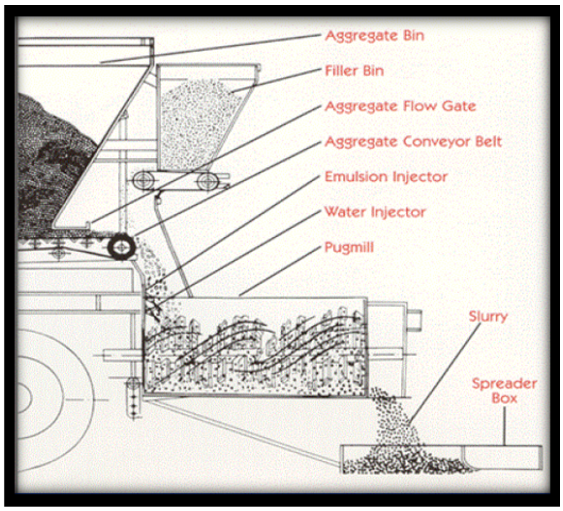

Microsurfacing is applicable for various field as surface treatments for high volume collectors and arterials as well as highways, Rut filling applications, Double applications For addressing surface and others.

The various methods of surface maintenance such as fog seal, sand seal, scrub seal, chip seal, slurry seal, clap seal , micro surfacing and pavement dressing etc. [2].Chip seals are the most common surface treatment for low-volume roads. A chip seal is an application of asphalt followed by an aggregate cover. In 1935 New Zealand's F.M. Hanson was the first to present a scientific approach to the design and construction of chip seals. The asphalt is usually applied as hot asphalt cement, cutback asphalt, or emulsified asphalt. Applications are very wide like Seal Surface, Seal low intensity fatigue and block cracking, Restore surface Friction, Temporary base course cover, Surface for light to medium traffic ,Skid resistant surface etc.[3] Due to the severe growth in traffic rate among many metro-Politian cities in India, road treatment can't be done on every alternative year. So, it is essential to utilize a method which is economical than the others as well as increases the life span of the road surface and should not affect the regular traffic on a large scale.

[II] STUDY AREA

The Mehsana-Gozaria Highway was being repaired in the period of March-April 2014. The total length of highway is around 15km. The repairing technique was Chip Seal. With regarding to this topic, a road stretch of 1km on this highway has been studied by our team at that time. shown in Figure -2 selected stretch and also figure- 3 and 4 location wise damaged surface. In the beginning, the study area, the highway at which the road resurfacing work is going on by using chip seal, will be selected. At the next step, the clear estimate of the cost of resurfacing works on particular highway will be got from their site office. Further, from this estimate of resurfacing of the full length of road, the cost for 1km stretch will be estimated.

After the costing of chip seal is finished, the costing of the resurfacing by micro surfacing will be begun. The IRC: SP-81-2008 code will be used for the quantity of the materials in well-proportioned manner.

The costing of resurfacing by micro surfacing will be found with the help of the Code and SOR. In Standard Data Book there is a costing for 16,000sqmt, by which the costing for 7000sqmt (1km stretch) and thus for 1MT may be done.



Volume - 5 | Issue - 1 | Jan Special Issue - 2015 | ISSN - 2249-555X



Figure:-3 Location 1: More Damaged Surface



Figure:4-Location 2: Relatively less damage Surface

There were three types of equipments being used at the site. One was the spreader equipment named "Asphalt Mechanical Paver Finisher", the second equipment was the Dumper Truck and the third was the Road Roller.

Selection of appropriate technique to compare with Micro-surfacing with respect to cost

A road resurfacing by conventional method (Multiple Chip Seal) costs Rs.350 per square meter. NHAI plans to bring down the cost to Rs.180-200 per square meter using micro surfacing method, the utilization of Microsurfacing is more suitable against Multiple Chip Seal as per cost.[4]

As per the present scenario of India, there is a need to look at some convenient techniques which not only provides a lifelong road surface but also proves to be economical.

Using Chip Seal

The rate analysis of the Chip Seal was available at the site office. With the help of that the quantity sheet and rate analysis for 1km stretch of road may be prepared as shown in Table 1.

Sr. No	Item	Quantity	Length (m)	Width (m)	Thickness/ Depth (meter)	Vol. (m^3)	Density (kg/m^3)	Weight (Metric Ton)
1	37.5mm thick B.M. layer	1	1000	7	0.0375	262.5	2.20	577.55
2	20.0mm thick B.M. layer	1	1000	7	0.0200	140	2.30	322

Table 1 Quantity sheet for chip seal

Rate Analysis is done taking 37.5mm thick B.M

Providing and lying 37.5mm thick B.M. with aggregates as per specification and Emulsion asphalt tack coat @ 2.50kg/10sqmt with mechanical sprayer and bitumen grade 60/70 for mixing @ 34.00 kg/MT [5] asphalt in continuous drum mix plant and spreading the same by paver finisher and consolidation with vibratory roller including providing all materials equipment's, tools and plants, firewood, oil, kerosene, labour charges etc. complete using contractor's own machinery drum mix plant and Paver finisher etc. complete[6]

Cost of Aggregate

Rate analysis for estimating cost of aggregate required is shown in Table 2.Sr. No	Material	Quantity	Rate	Per	Amount
1	Metal 26.5mm to 19mm	0.033	997.20	Cmt	32.91
2	Kapchi 19mm to 13.2mm	0.1518	1054.70	Cmt	160.10
3	Grit 13.2mm to 4.75mm	0.3036	954.70	Cmt	289.84
4	Grit 4,75mm to 2.36mm	0.099	879.70	Cmt	87.09
5	Stone dust 2.36mm to 0.075mm	0.0726	654.70	Cmt	47.53
	Total	0.660			617.47

Table 2 Rate analysis for aggregate

Cost of Aggregate for 1 MT $= \frac{(1000-34) \times Rs.617.47}{1000}$

=Rs. 596.48 per MT (A)

Cost of Asphalt

For Emulsion tack coat @ 2.5kg/10sqmt, 1 MT will cover

$$\frac{1}{(0.0375 \times 2.20)}$$

=12.12 sqmt

Quantity =12.12 * (2.50 kg/10sqmt)

=3.03 kg

Rate of this quantity $= \frac{3.03kg \times Rs.33978.97(from\ SOR)}{1000}$

=102.95

Rate for mixing $= \frac{34.00kg \times Rs.42392.51(from\ SOR)}{1000}$

=Rs. 1441.34

Total = Rs. 1544.29 (B)

Volume - 5 | Issue - 1 | Jan Special Issue - 2015 | ISSN - 2249-555X

Cost of Labour (As per SOR) =Rs. 425.00 per MT (C)

Overhead Charges =12 % of (A+B+C) =Rs. 295.54 (D)

Contractor's Profit = 10% of (A+B+C+D) =Rs. 275.84 (E)

Cost for 1MT = Rs.3034.20 per MT

Cost for entire 1km stretch of road
= (Weight) * Total Cost (Rs. /MT)

=577. 55 MT * Rs. 3034.20 per MT

=Rs. 1752402.21 (1)

Same as for 20.00mm thick B.M. cost for entire 1 km stretch of road Rs. 2915372. 20

Total cost of construction within 1km = (1) + (2)

= Rs. 1752402.21 + Rs. 2915372. 20

=Rs. 2915372.83

(Machinery costs included)
Using Micro Surfacing

The rate analysis of the Microsurfacing is carried out with the help of IRC: SP: 81-2008 and Standard Data Book of R&B Department.[7] With the help of that the quantity sheet and rate analysis for 1km stretch of road is prepared as shown in Table 3.

Sr. no.	Item	Qty.	Lth. (m)	Width (m)	Tt. / Depth (meter)	Vol. (m³)	Density (kg/m³)	Weight (MT)
1	10mm thick polymer modified asphalt (micro surfacing material) layer	1	1000	7	0.010	70.00	2.20	154.00

Table 3 Quantity sheet for microsurfacing

Rate analysis using microsurfacing is shown in Table 4.

Description	Unit	Qty.	Rate Rs.	Cost Rs.
1) Labour				
Mate	day	0.24	200.00	48.00
Mazdoor	day	6.00	125.00	750.00
2) Machinery				
Mechanical broom	Hr.	6.00	328.78	1972.65
Air compressor 250cfm	Hr.	6.00	294.78	1766.81
Mobile slurry seal equipment	Hr.	6.00	929.15	5574.89
Front end loader 1 cum bucket capacity	Hr.	6.00	743.32	4459.91
Tipper 5.5 cum capacity for carriage of aggregate from stockpile on road side slurry equipment, bitumen emulsion and filler	Hr.	6.00	285.89	1715.35
Nlcsk_rgaj_wcpcb pmjjcp with individual wheel load not exceeding 1.5 tonnes	Fp,	4,.0	/ / 24,21	4656,36
U_rcpr_l i cp4i jrpa_n_agrw	Fp,	0,.0	/ . . ,. .	0. . ,. .
/ ' Material				
Pcqgbs_j @gl bcp> 7,03 percent of mix 80×2.2×0.11	Rl ,	/ . , 28	17453,.0	4237. 7, 00
Dgl c aggregate 4.75mm and below 88 percent of total mix, 80×2.2×0.87=153.12tonnes. Taking density 1.5= 153.12/1.5=102.08cum	As m	/ 32 .88	27/	54. 24,.8
Dgjjcp> / ,3 ncpacl rmd total mix = 80×2.2×0.015	Rml ne	0,44	1. . . ,. .	570. ,. .
Amqrmdu_rcp	I jrp	2,60	1,. .	/ 2,2.
0' Overhead charges @ 12% on (1+2+3)				7. 17. ,48
1' Contractor's profit @ 10% on(1+2+3+4)				62142,43
2' Cost for 16000sqmt= (1+2+3+4+5)				706. / . , 97
3' Rate per sqmt= (1+2+3+4+5)/16000				36,. .
4' Cost for 1 MT= [(1+2+3+4+5)/16000]/0.01×2.2				**0414,14**
5' Cost for 154 MT= {[(1+2+3+4+5)/16000]/0.01×2.2}× 154				**2. 4. . . , 00**
R_`jc 2 P_rc_l_jwqgqsqgle k gapmqspd_agle				

[IV] RESULTS AND DISCUSSION

Following the methods for maintenance of road by using chip seal and microsurfacing it is found that most of the cost i.e 60 % in utilization of chip seal comes for asphalt and machinery required to do the work. While material and labour cost is 12 % each. Detailed cost of each item for chip seal is shown in chart wide Figure-5.

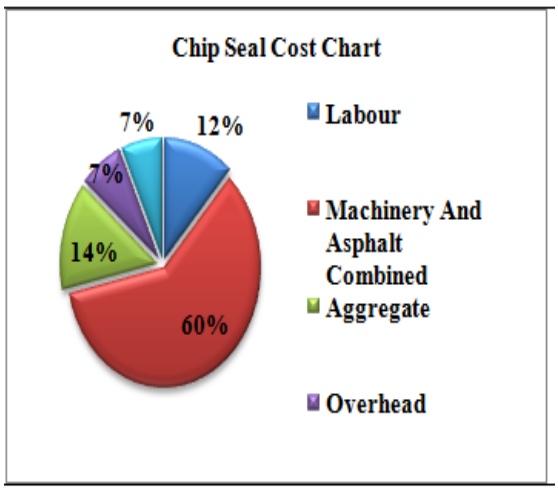

Figure:-5 Cost chart of chip seal

Using micro surfacing cost for Asphalt required and machinery expenses reach to 72 % which is more compared to chip seal.While aggregate and labor required for doing the work is found 8 % and 9 % respectively. Detail item wise cost for micro surfacing is shown in Figure 6 wide pi chart.

Volume - 5 | Issue - 1 | Jan Special Issue - 2015 | ISSN - 2249-555X

[V] CONCLUSION

From the hierarchies of notes that our project consists, we can conclude that Micro-surfacing is a road re-surfacing method which can be utilized on major roads and highways efficiently than the other road re-surfacing methods.

The various factors in which Micro-surfacing outclass the other methods are:

- Less cost consumption
- Time saving
- Expected life is much more
- Less labour charges
- Less maintenance required

The calculations done by us for 1 km stretch of a highway through two methods, namely:Micro-surfacing and Chip seal It shows that Micro-surfacing is an economical method than Chip seal and requires much less time to carry out the whole procedure.

REFERENCE [1] Long-term Benefits of Microsurfacing Applications in Indiana – Methodology and Case Study 1. | [2]Preventive Maintenance Treatments of exible Pavements: A Synthesis of Highway Practice, the U.S. Department Of Transportation Federal Highway Administration (2) | [3] Cost Benefit Analysis of Including Microsurfacing in Pavement Treatment Strategies & Cycle Maintenance, Commonwealth Of Pennsylvania Department Of Transportation (3) | [4] Recommended Performance Guidelines for Micro-Surfacing, A143 (Revised), January 2001 | [5] Micro Surfacing Specifications | [6] Basic Rates for S.O.R. 2012-2013, Statement No. 1, 2, 3, 4, & 5. R&B Department, Government of Gujarat, Gandhinagar | [7] IRC:SP:81-2008, Tentative specifications for slurry seal and micro surfacing, Indian Roads Congress, 2008 | Websites| www.forconstructionpros.com | www.fs.fed.us | www.atexsealcoating.com | www.morganpavement.com | www.fcgov.com | www.betterroads.com | articles.timesofindia.indiatimes.com