Original Research Paper

Volume-9 | Issue-7 | July - 2019 | PRINT ISSN No. 2249 - 555X

Engineering

SLEEP DETECTION AND ALERT SYSTEM IN AUTOMOBILES

Roni T Sam	UG Scholar, Department of Electrical And Electronics, TKM Institute of Technology , Kollam
Akhil S Babu*	UG Scholar, Department of Electrical And Electronics, TKM Institute of Technology , Kollam *Corresponding Author
Indhu Lekha	UG Scholar, Department of Electrical And Electronics, TKM Institute of Technology , Kollam
Leena Ansari	Assistant Professor, Department of Electrical And Electronics, TKM Institute of Technology , Kollam

ABSTRACT This paper proposed to help the drivers to avoid accidents due to sleeping. With the growth in population, the occurrence of automobile accidents has also seen an increase. Feeling drowsy while driving could cause hazardous traffic accident. However, the drivers may feel sleepy or even fall asleep while driving alone on highway or driving over a long period of time. Now a days most of the anti-sleep detection sold in the market is simply earphone making intermittent noises, which is quite annoying and inefficient. Therefore, there is a high demand for efficient driver sleep detection system. Therefore, we came up with an idea to develop a driver anti-sleep alarm system, which could effectively meet this demand. Through this paper, we provide a real time monitoring system using image processing, face/eye detection techniques and we are providing one additional information for neighbouring drivers and pedestrians by giving them a caution signal by central monitoring system. Here in this signal we assure alternate flickering of side indicators and dim n bright of head lamp and rear lamp is provided.

KEYWORDS : Raspberry pi, Ultrasonic Sensor , Led , Buzzer , Iris sensor

INTRODUCTION

Now days road accidents are major problem and its percentage increases per year. The major problem behind the road accidents are drowsiness of car drivers. To avoid this problem different technologies are developed. Most of the technologies are used for detecting drowsiness and also preventing the road accidents. Here we are using a vehicle based approach for the drowsiness detection and second one is based on behavioral, in which it continuously monitored eye closure. The main factors which gets the driver fatigue are sleep, work, time of day and physical condition. Suppose a car driver works during day and travels a car during night without taking rest then human body clock affects on him. Like this, type of work also affects on drivers during night. Thereby these situations affect the ability to control the vehicle. The primary purpose of this drowsiness detection system is to develop a system that can reduce the number of accidents from drowsiness of driver. For the drowsiness detection we use a camera for detecting image ,which is capable of capturing real time images and videos. Eye detection is the important part of this project will be done using camera interface. The captured frame is to be processed by raspberry pi. The algorithm of raspberry pi is implemented using python. Here we use python 3 for future developments. In advance vehicle control and safety system using eye detection this design is based on embedded system application principles.

Designing the system that will accurately monitor the open and closed state of the driver's eye in real time is that we focus and concentrate on this paper. To avoid an accident early the symptoms of the driver fatigue can be detected by constantly monitoring the eyes. . The observation of eye movements and its position is used to detect the drowsiness. There are so many devices to detect when drivers feel sleepy .

The serious problem resulting in many thousands of road accidents each year is drowsiness of driver. It is not accurately possible to calculate the exact number of sleep related accidents.it is because of the difficulties in detecting whether fatigue was a factor and in assessing the level of fatigue .However research suggests that up to 25% of accidents on monotonous roads in India are due to fatigue of drivers. Researches also shows that in other countries also indicates that driver fatigue is a major problem.

While driving young male drivers, truck drivers, company car drivers and shift workers are the most at risk of falling sleepy. However any driver can feel sleepy during travelling long distances or they get tired it leads to the risk of sleep related accidents. The early time of the morning and the middle time of the afternoon are the peak times for causing fatigue accidents and long journeys on monotonous roads, particularly motor-ways, are also results in driver falling asleep. In this paper the face detection algorithm and eye tracking have been developed on frontal faces with no restrictions in the background .The proposed method for eye tracking is categorized into five stages. Frontal images are obtained from a database, the probability maps for the eyes region are built etc.

OBJECTIVES

The main objective is to develop a nonintrusive system which will detect the fatigue or drowsiness of driver and will issue a warning with the help of indications. As most of the accidents are caused due to drowsiness, this project will help to decrease the crashes or accidents rate. Through this project safety is our main objective, for enhancing the safety we are detecting the eye blinks of the driver and estimating the driver status and control the vehicle accordingly. LED and buzzers are used for giving alert to the driver and neighboring vehicles. Here we are using ultra sonic sensors to measure the distance between the objects. We have a predefined threshold value. The function of the gear motor is to reduce the speed of vehicle if any problems found .In future we can add some more features. This system will provide safety to the drivers also the opposite vehicles will realize the condition is wrong. This system will be help the driver to automatic slowdown the vehicle.

BLOCK DIAGRAM

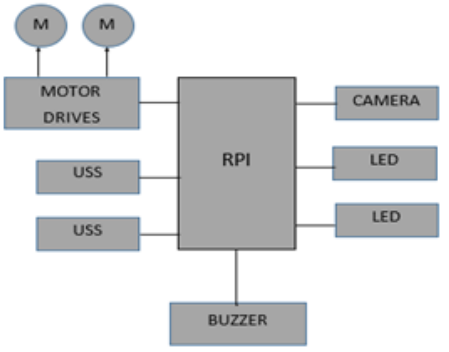

Figure 1 . block diagram

In this figure we have the components used in the system. The main component used in this system is RASPBERRY PI it will control the whole process. ULTRASONIC SENSORS are connected to it also an iris scanner here we use CAMERA and we use LED and BUZZER for indication purposes. These all signals will be calculated then the RPI will the signals to the MOTOR DRIVES it will help to slowdown the speed of the vehicle at the same time it will resend a signal to the RPI. Then rpi will give signals to the buzzer and leds which will be alerts the driver and also to the neighboring vehicles.

CIRCUIT DIAGRAM

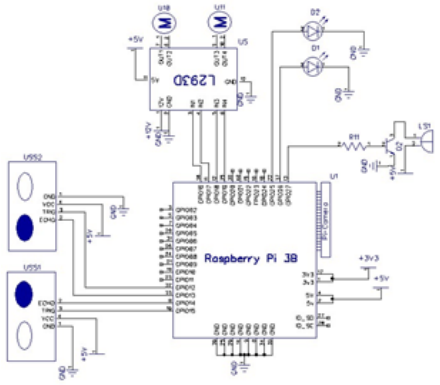

Figure 2, Circuit diagram

Here we are using Raspberry Pi as main control unit. With help of Raspberry Pi we mainly control Ultrasonic sensor, Camera interface, Motor Driver and LED blinking system. Raspberry Pi is programmed with python language. Here we use python because all other components are able to work in python language.

The main function of Ultrasonic sensor is to calculate the distance between the front moving or back coming vehicles. There is a tolerance value set up by the program in the Raspberry Pi, if the value is in normal rate the vehicles will run smoothly if it exceeds the tolerance value then corresponding signal is given to the motor drive to stop the motor.

The aspect explained above is not based on drowsiness. In case of drowsiness detection we are using camera interface to detect drowsiness. From that facial expressions are continuously monitored and these monitored values are checked by Raspberry Pi with the programmed values. If there is any error with the tolerance value then caution signal is given to LED blinking circuit and the motor driver circuit. LED will blink alternatively to give alert to the pedestrians and the neighboring vehicles. And with the help of motor diver we would able stop the motor automatically.

RASPBERRY PI

Raspberry pi is a tiny affordable computer that can be used to learn and do programming. It is a low cost small sized computer.it can be used for wide variety of computing applications. Raspberry pi can be connect to computer monitor or television. It can be programmed using different languages. In this project we use python language for programming. Here we are using raspberry pi 3 because it has some benefits over raspberry pi 2. The main benefits are it has Bluetooth, wi-fi and it has a more powerful CPU/GPU pair. Raspberry the name is a reference to a fruit,it is a naming tradition in old days of micro computers . Raspberry pi is the brain of this system. Here the decision making will be done by this. All systems are connected to it and it will control every systems



Figure 3, Raspberry pi

ULTRASONIC SENSORS

Ultrasonic sensors are otherwise called as ultrasonic transducers.it is a type of acoustic sensor which can be divided into three broad categories such as transmitters, receivers and transceivers. Transmitters are used to convert electrical signals into ultra sound. Receivers are used to convert ultra sound to electrical signals, and transceivers can both transmit and receive ultrasound. Ultrasonic sensors are used in systems in a similar way to radar and sonar.it can know about the targets by evaluating the reflected signals. Passive ultrasonic sensors are microphones that can detect ultrasonic noise that is occur under certain conditions. Here ultrasonic sensors will help to find the neighboring vehicles distance and it will be send to the raspberry pi. Then the vehicle will be slow down automatically by using the data. This sensors will be fixed on the front and back of the vehicle. So here we can find the distance of the neighboring vehicles by calculating the distance this data will be send to the raspberry pi. Raspberry pi will be help to slowdown the vehicle.

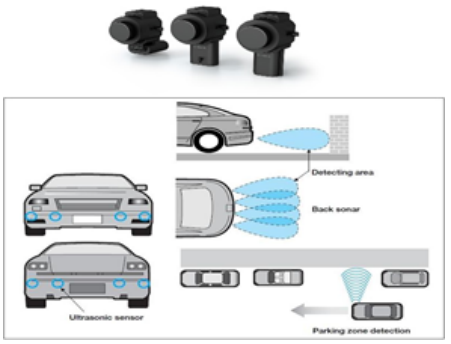

Figure 4, Ultrasonic sensors

LED

Light emitting diodes are usually used to illuminate objects and places. Here in our project we use it as an indication. This indication is actually a sign of danger, which gives alert to the neighboring vehicles. LEDs are widely used because of its small compact size, low energy consumption, extended life time and flexibility. The applications of LEDs can be seen in various fields. Led will be help to indicate the vehicle is in danger condition.



Figure 5, led system

IRIS SCANNING

In this system we used cameras for the iris scanning. The camera sensor is used for capturing the image of drivers eye. It is used for the continuous monitoring of eye blinks of the driver. A real time sensing can be done through using real time images and videos. The camera can be plugs directly into the USB port on the raspberry pi. The camera

has no infrared filter so it is perfect for taking infrared photographs and it can take photos even in low light conditions. Here the iris scanning is the core process of this system. The drowsiness can be find out by the camera. For a normal man the iris variation and a drowsiness is different. Here we fix a threshold value when the value cross then it will send the data to raspberry pi. Then all the signals will be send to the corresponding components.



Figure 6, Iris scanning

BUZZER

Here the buzzer is used to indication purposes. When the driver is in drowsiness stage the raspberry pi will give signal to the buzzer and it will make a beep sound. Buzzer is an audio signaling device which may be mechanical, electromechanical, or piezoelectric. Buzzer will help to alert the driver



Figure 7, buzzer

MOTOR DRIVE

Here we used motor drive is L293d. it is a IC which have 16 pins. It can control a set of two DC motors simultaneously of any direction. It means that we can control two DC motor with a single L293D IC. This IC is the connecting drive of motor and raspberry pi. The data from the raspberry pi will send to the drive IC. Then the IC will adjust the speed. If thw drowsiness occur the signal will send to the drive its reduce the speed with considering with the ultrasonic sensors. So the speed will be slowdown by depending the neighboring vehicles



Figure 8, L293d

FUTURE SCOPE

The project can be implemented with alcohol detection for ensuring better safety. we can also make advancements which will help to senda message or an alert to nearby hospitals. For logistics we can provide a live monitoring system. In future the alcohol detection along with the drowsiness detection system will improve the efficiency of the existing system.

CONCLUSION

In this paper the greater potential of interfacing raspberry pi camera with the processor to detect drowsiness is used. The captured images and videos are properly initialized by raspberry pi camera. This system is developed to localize and track the eyes and head movements of the driver for the drowsiness detection. Also this system can provide alert to the opposite vehicles. Thereby we give safe driving to our customers

REFERENCES

1. Anirban Dasgupta, Anjith George, S. L. Happy, and Aurobinda Routray, "A Vision-Based System for Monitoring the Loss of Attention in Automotive Drivers" Member, IEEE
2. TRANSACTIONS ON INTELLIGENT TRANSPORTATION SYSTEMS, VOL. 14, NO. 4, DECEMBER 2013
3 Ralph Oyini Mbouna, Seong G. Kong, Senior Member, IEEE, and Myung-Geun Chun"Visual Analysis of Eye State and Head Pose for Driver Alertness Monitoring" IEEE TRANSACTIONS ON INTELLIGENT TRANSPORTATION SYSTEMS, VOL. 14, NO. 3, SEPTEMBER 2013
4 Dwipjoy Sarkar, Atanu Chowdhury "A Real Time Embedded System Application for Driver Drowsiness and Alcoholic Intoxication Detection" M.Tech student, Assistant professor, Department of Electronics & Communication EngineeringNIT Agartala, IndiaTripura, IInternational Journal of Engineering Trends and Technology (IJETT) – Volume 10 Number 9 - Apr 2014
5 Moritz Kassner, William Patera, Andreas Bulling, "Pupil: An Open Source Platform for Pervasive Eye Tracking and Mobile Gaze-based Interaction",30April 2014
6 Mohamad-Hoseyn Sigari , Muhammad-Reza Pourshahabi ,Mohsen Soryani and Mahmood Fathy, "A Review on Driver Face Monitoring Systems for Fatigue and Distraction Detection", International Journal of Advanced Science and Technology Vol.64 (2014), pp.73-100
7 Singh, Sarbjit and Papanikolopoulos, N.P. —Monitoring Driver Fatigue Using Facial Analysis Techniques|, IEEE Intelligent Transport System Proceedings (1999), pp 314-318.
8 Ueno H., Kanda, M. and Tsukino, M. —Development of Drowsiness DetectionSysteml,IEEE Vehicle Navigation and Infor mation Systems Conference Proceedings,(1994), ppA1-3,15-20.
9 Weirwille, W.W. (1994). —Overview of Research on Driver Drowsiness Definition and Driver Drowsiness Detection,| 14th International Technical Conference on Enhanced Safety of Vehicles, pp 23-26.
10 R. Brunelli, Template Matching Techniques in Computer Vision: Theory and Practice, Wiley, ISBN 978-0-470-51706-2, 2009
11 J. Cox, J. Ghosn, P.N. Yianilos, —Feature-Based Recognition Using Mixture-Distance, —NEC Research Institute,Technical Report 95 - 09, 1995.
12 I. Craw, H. Ellis and J.R. Lishman, —Automatic Extraction of Face-Features,|Pattern Recognition Letters, 5, pp. 183-187, 1987.
13 L.C. De Silva, K. Aizawa and M. Hatori,—Detection and Tracking of Facial Features by Using Edge Pixel Counting and Deformable Circular Template Matching,|IEICE Transaction on Information and Systems, Vol. E78-D No. 9, pp. 11951207, September 1995.
14 C. Huang and C. Chen, —Human Facial Feature Extraction for Face Interpretation and Recognition,| Pattern Recognition, Vol. 25, NO. 12 pp.1435-1444, 1992.
15 M. Kass, A.Witkin and D.Terzopoulos, —Snakes: Active Contour Models,|1042-1052, 1993, International Journal of Computer Vision,
16 X.Li and N.Roeder,—Face Contour Extraction from Front View Images,|Pattern Recognition, Vol. 28, No. 8, pp.