Original Research Paper

Volume-9 | Issue-7 | July - 2019 | PRINT ISSN No. 2249 - 555X

Engineering

# SMART BLDC PUMP

| | |
|---|---|
| **Fathima Sulfikkar** | UG Scholar, Department of Electrical And Elecctronics TKM Institute of Technology, Kollam |
| **Febin C*** | UG Scholar, Department of Electrical And Elecctronics TKM Institute of Technology, Kollam *Corresponding Author |
| **Jophy Johnson** | UG Scholar, Department of Electrical And Elecctronics TKM Institute of Technology, Kollam |
| **Surya Surendren** | Assitant Professor, Department of Electrical And Elecctronics TKM Institute of Technology, Kollam |

**ABSTRACT** In this paper we have designed the brushless DC (BLDC) motor driven water pumping system, it usually requires a DC-DC conversion stage and maximum power point tracking (MPPT) for the optimal use of solar photovoltaic (PV) generated power. Increased cost, reduced efficiency and complexity are mainly due to the DC-DC conversion stage. In this, the BLDC motor drive uses a single stage solar PV energy conversion system, ie it eliminates the DC-DC conversion stage. Here a common voltage source inverter (VSI) is used for the simple control of solar PV array at its peak power and for the BLDC motor control. The BLDC motor phase current sensors are eliminated in this proposed control system. For the soft start and speed control of motor pump no supplementary control is required. Using the optimal power of solar PV array speed is controlled. MATLAB/Simulink based simulated results are used for the performance evaluation and suitability of proposed system.

**KEYWORDS :** Brushless DC motor, Maximum power point tracking, Solar PV modules, Voltage source inverter.

## INTRODUCTION

Increased energy crisis due to diminishing fossil fuels and the declining price for PV modules and power electronic devices, leads to the development and industrialization in the field of solar PV technology. Solar PV energy has various applications, among these most application is standalone water pumping system. It is used in various applications such as irrigation, urban street watering and fish farms.

The need for electrical energy is exponentially increased due to utilization of electric motors for the modernized man and their wellbeing. About 40% of electric power expenditure is for the electric motor. Therefore in a solar powered water pumping system, motor has an important role in increasing or decreasing the efficiency and cost. The number of solar modules directly depends on an efficient motor. So it reduces the capital cost. For a low power water pumping system DC motors are used. Brushed DC motors have less efficiency and requires periodic maintenance. Because of sliding brushes and commutator, it requires regular maintenance.

An induction motor based system is reliable, rugged, better efficiency, maintenance free due to no brushes and more flexible in control. For PV fed water pumping dc motor and induction motor is replaced with BLDC motor due to its increased efficiency and compact structure in comparison with others. Simple control, easy to drive, wide range of speed, least maintenance requirement, and reliability are the merits of a BLDC motor. Due to this reasons BLDC motor drive becomes most promising and attractive water pumping. Schematic diagram for conventional brushless DC motor drive for PV water pumping is shown in figs1&2. In fig 1, DC-DC converter is used for the maximum power point tracking (MPPT) for the motor control two phase currents are to be sensed. In fig 2, another conventional topology used to eliminate the phase current sensors are illustrated. As usual, operating power of PV array, speed control of BLDC motor-pump, and soft starting are obtained by using a DC-DC converter. Through a variable voltage at the DC bus of voltage source inverter (VSI) speed control is performed. However, fundamental frequency operation of VSI is achieved by using a bulky capacitor at DC link. The DC-DC converter is replaced with a Z-source inverter in [1]. It provides a single stage solution, other components of fig 1 remains unchanged. However, DC bus voltage and motor phase currents are to be sensed. The position sensor free BLDC motor is reported in [2-3] for the sensor reduction, for this application. However, two-stage power conversion is required for those utility models.

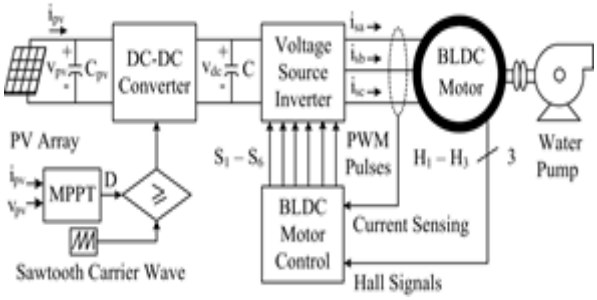


**Figure1. Conventional BLDC motor drive with phase current sensors for water pumping based on two stage solar PV energy conversion system.**

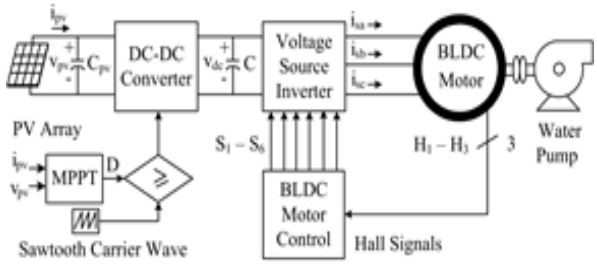


**Figure2. Conventional BLDC motor drive without phase current sensors for water pumping based on two stage solar PV energy conversion system.**

Two stage conversion topologies are mentioned in the above conventional methods. For optimizing the operating power of PV array, an intermediate DC-DC converter is required. It leads to the additional cost, size, complexity and reduced efficiency. A single stage solar conversion system is used as a unique solution for the above mentioned problems. It eliminates the DC-DC conversion stage. By using the same VSI, motor control and maximum power point tracking is obtained. The attractive merits of conventional topology shown in fig 2 is also included in this, such as elimination of phase current sensing and soft starting. By the optimum power of solar PV array, speed of BLDC motor is controlled. Using the pulse width modulation (PWM) switching of VSI eliminates the bulky capacitor at DC link with the low valued capacitor.

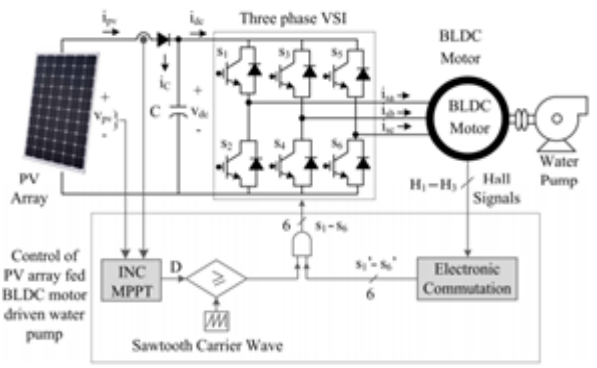


**Figure3. Proposed water pumping based on a single stage solar PV energy conversion system.**

- In comparison with an induction motor driven system, the proposed BLDC motor driven system have high power conversion efficiency. Under light loading, the efficiency of induction motor decreases due to excitation losses. No excitation losses occurs under permanent magnet excitation. Also under bad weather condition, it produce a reduced volume of water delivery as compared to BLDC motor.
- Installation cost and size of PV array directly depends on the efficiency of BLDC motor. On comparing with an induction motor, the number of required PV modules is less with a BLDC motor.
- VSI with reduced capacity is used due to the low power factor of BLDC motor. So the cost of PV pumping system is reduced. In the case of a BLDC motor, speed does not depends on the power frequency. The capacity and size of machine can be controlled easily by designing the speed of BLDC motor much higher. a compact solar water pumping system can be obtained. So a compact water pumping system is obtained.
- The BLDC motor is fed with rectangular current pulses, it provides a better DC bus voltage utilization. Therefore the voltage rating of DC bus capacitor and switching devices of VSI is reduced.
- In comparison with the induction motor, BLDC motor has much simpler speed control. Therefore, unlike the speed control of an induction motor[4,5-7], no additional phase current sensing or VSI is required. Two VSI is used in the methods suggested in [4,7]

The BLDC motor pump set and PV array should work under all the possible weather conditions. Using MATLAB based simulation and an experimental system, its steady state, dynamic and starting characteristics can be checked with various weather conditions. The operation of whole assembly is satisfactory under all the conditions.

## CONFIGURATION AND PRINCIPLE OF OPERATION

The proposed brushless dc motor with single stage solar PV energy conversion system is illustrated in the fig 3. The VSI connected the BLDC motor, VSI is directly fed with solar PV array. The flow of reverse current is prevented using a series diode connected to the PV array. The power transfer between the PV array and to the BLDC motor is enabled by the connected DC link capacitor. For the optimum utilization of solar PV array an incremental conductance (INC) MPPT technique is used. This technique generate an optimum duty ratio by using PV voltage and current as feedback signals, it depends on the maximum power of solar PV array. To accomplish the electronic commutation the BLDC motor has 3 inbuilt Hall sensors.

## SYSTEM DESIGN AND SPECIFICATION

For the operation of a water pump, an appropriate design and specifications of BLDC motor pump and solar PV array is more important. To drive the water pump a 6-pole, 3000 rpm, 3.45 kW BLDC motor is chosen. Table1 shows the detailed specification of BLDC motor. The PV array, DC link capacitor, BLDC motor are selected according to the atmospheric conditions.

**TABLE.1 BLDC MOTOR SPECIFICATION**

| | |
|---|---|
| Power,Pm | 3.45kW |
| Speed, N | 3000rpm |
| No.of poles | 6 |
| Resistance,$R_a$ | 0.92Ω |
| Inductance,$L_a$ | 2.8mH |
| Motor Torque Constant,$K_t$ | 0.74Nm/A |
| Motor Voltage Constant,$K_v$ | 78V/krpm |
| Moment of Inertia | 20.8kg,$cm^2$ |

### *A. Estimation of parameters of solar photovoltaic array*

As per the rating of selected BLDC motor-pump, a PV array with maximum power capacity of 4 KW at standard atmospheric condition (1000 W/m^2; 25℃). To compensate the power loss associated with VSI and motor pump and also to run the motor at rated condition, the selected pv array is sufficient. To make a PV array with relevant size 36 cells connected in series to make a PV module. At standard atmospheric condition, a solar cell has open circuit voltage in the range of 0.5-0.6 V[8]. So a module generates 360.55=19.8 V as open circuit voltage. Around 71%-78% of the open circuit voltage[9] is the voltage produced by a module at MPP. So it is calculated as 19.80.78=15.44 V.

At rated torque and speed, the PV array voltage required at the DC link of VSI to run the motor is 310V. At MPP the voltage of PV array should be 310V. Therefore the series connected modules are calculated as 310/15.4420. the PV array should have a maximum power capacity of 4000W. The PV current at MPP is estimated as 4000/310=12.9A. As per the design, three parallel module generates this current. each module has an MPP current of 12.9/3=4.3A. The short circuit current is generally found between 78%-90%.[9]. So the short circuit current for each module be 403/94.8A. Finally at mpp,60 modules each with PV voltage and current of 15.44V and 4.3A, are connected to get the desired design. Design parameters are shown in table 2.

**TABLE.2 SOLAR PV ARRAY DESIGN**

| **Specifications of PV Module** | |
|---|---|
| Open circuit voltage, $V_o$ | 19.8V |
| Shot circuit current, $I_o$ | 4.8A |
| MPP voltage, $V_m$ | 15.44V |
| MPP current, $I_m$ | 4.3A |
| **Design of PV Array** | |
| Power of MPP, $P_{mpp}$ | 4kW |
| MPP voltage, $V_{mpp}$ | 310V |
| MPP current, $I_{mpp}$ | 12.9A |
| No. of series connected modules, $N_s$ | 20 |
| No. of parallel connected modules, $N_p$ | 3 |
| Short circuit current, $I_{sc}$ | 14.4A |
| Open circuit voltage, $V_{oc}$ | 396V |

### *B. Design of link capacitor*

The DC link capacitor of VSI is a small capacitor connected across the PV array. the ripple current that which the capacitor carries is given by

$$i_c=i_{pv}-i_{dc} \quad (1)$$

Where $i_{pv}$=12.9A, which is PV array current at MPP and $i_{dc}$ is the DC link current of VSI

$$I_c=i_{c,max}=i_{pv}=12.9A \quad (2)$$

The capacitor required,

$$C=\frac{icmax}{fsw\times\Delta Vpv}$$

$$=\frac{12.9}{10000\times(19.8\times20)\times0.04}=81.4\approx 100\mu f \quad (3)$$

The switching frequency is selected in accordance with component size, system response, noise disruption and conversion efficiency. The size of DC link capacitor decreases with high switching frequency. High switching frequency of VSI leads to low conversion efficiency. Finally, a 400V 100F capacitor is connected as DC link capacitor of VSI. On comparing with existing topology, this value is quite low.

## SIMULATION PERFORMANCE

The performance of the model is simulated through MATLAB/ Simulink under various condition

### *A. Steady state and starting performance at 1000W/m2*

It is shown in fig 5 and described as follows solar PV array performance : voltage, current and power of solar PV array is shown in fig 5, at an irradiance of 1KW/m2. to obtain the safe starting of motor proper duty cycle and step size is selected.

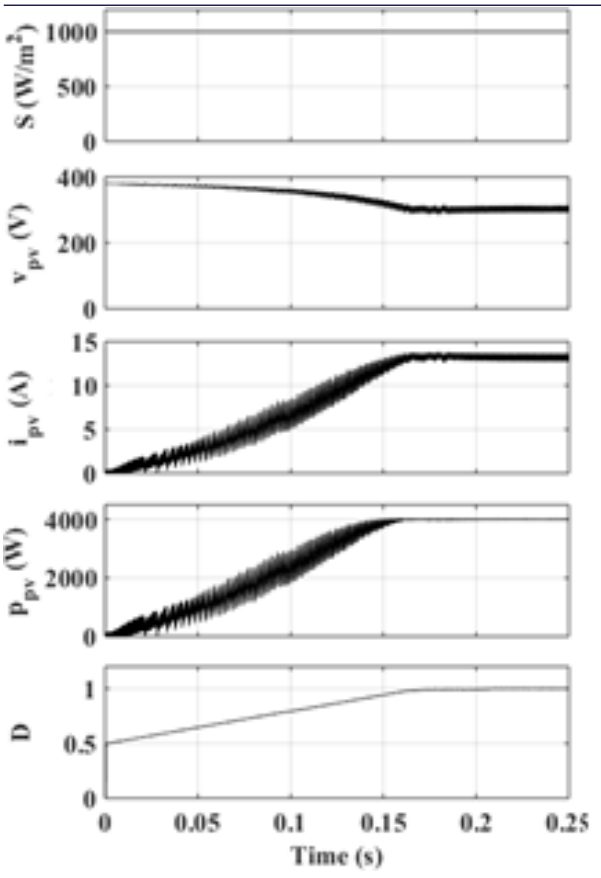


**Figure4. Steady state and starting performance of PV array of proposed system at 1 kW/m²**

### *B. Steady state and starting performance at 200W/m2*

The steady state and starting performance is shown in Fig 6 and described below. Solar PV array performance : At 200W/m2 the MPP is tracked. By adjusting the duty ratio of VSI, an optimum duty ratio is obtained to control the motor pump.

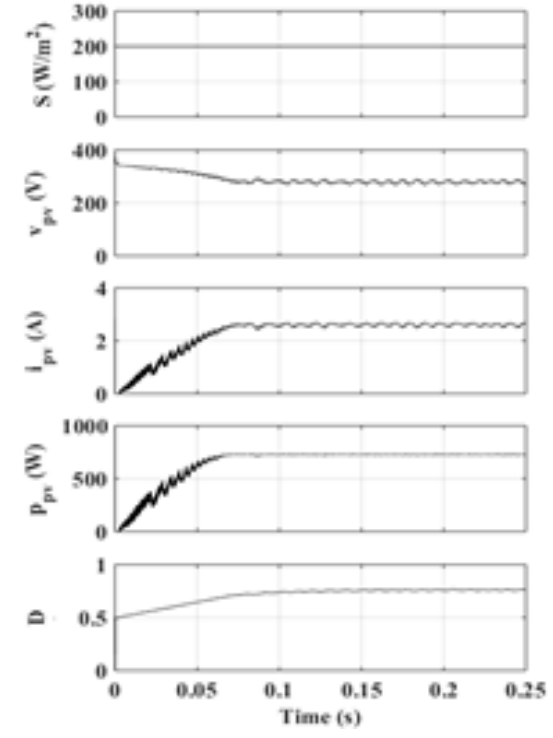


**Figure5. Steady state and and starting performance of PV array of proposed system at 200W/m²**

### *C. Dynamic performance*

Solar PV array performance: The irradiance level is reduced from 1000W/m2 to 500W/m2 as shown in figure below. For each irradiance level an optimum duty ratio is generated for speed control.

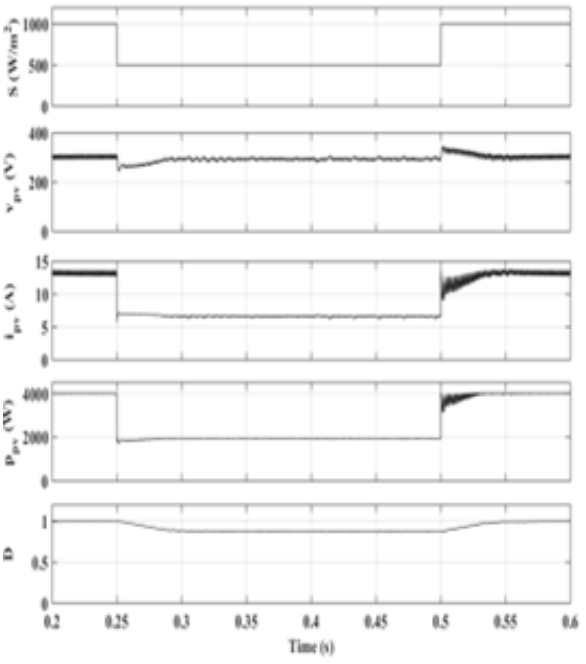


**Figure6. Dynamic performance of PV array of proposed water pumping system.**

## COMPARISON OF CONVENTIONAL AND PROPOSED SYSTEM

The prosed system have several benefits over the conventional system. The comparison between both the systems are shown in table below. Efficiency of the proposed system make more advantages than the conventional system at various irradiance and under the identical operating conditions in the efficiency calculation power losses in the water pump are not included. The efficiency of these scheme are graphically represented in figure.

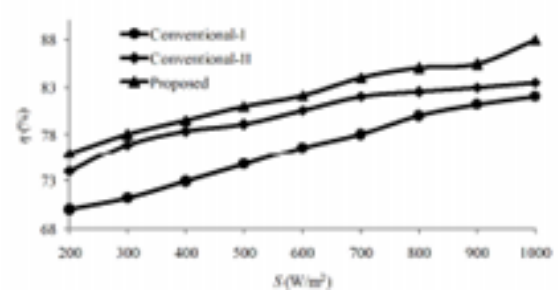


**Figure7. Efficiency comparison of proposed and conventional scheme**

**TABLE.3 COMPARISON OF PROPOSED AND CONVENTIONAL SCHEME**

| Scheme Attributes | | Conventional 1 (Fig1) | Conventional 2 (Fig.2) | Proposed (Fig.3) |
|---|---|---|---|---|
| DC-DC Converter | | Yes | Yes | No |
| Sensors | PV array | 1-Voltage & 1-Current | 1-Voltage & 1-Current | 1-Voltage & 1-Current |
| | BLDC | 1-Voltage, 2-Current & 3-Hall | 3-Hall | 3-Hall |
| DC bus Capacitance | | High | High | Low |
| Efficiency | | Low | Medium | High |
| Cost | | High | Medium | Low |

## CONCLUSION

Through the demonstration of variour stedy state,dynamic,starting

performance,the proposed BLDC motor driven water pumping based on a single stage solar pv generation has. been validated.It is simulated using matlab tool boxes The proposed system provides a DC-DC converter-less solution. motor phase current sensing eements have been eleminated . these results in simple and cost effective system.The proposed system does not contain any additional speed control techniques.

## REFERENCES


[1] R. Kumar and B. Singh, "Solar PV powered BLDC motor drive for water pumping using Cuk converter," IET Electric Power Appl., vol. 11, no. 2, pp. 222-232, Feb. 2017.

[2] Shi Aiping, Gao Shun mark, Shi Jian, Shi Yun Yang and Ye Lihua, "Highly-efficient fully-automatic photovoltaic water pump system," Patent CN 203548244 U, 16 Apr. 2014.

[3] Shi Aiping, Gao Shun mark, Shi Jian, Shi Yun Yang and Ye Lihua, "Highly-efficient fully-automatic photovoltaic water pump system," Patent CN 203548244 U, 16 Apr. 2014.

[4] S. Jain, A.K. Thopukara, R. Karampuri and V.T. Somasekhar, "A Single-Stage Photovoltaic System for a Dual-Inverter-Fed Open-End Winding Induction Motor Drive for Pumping Applications," IEEE Trans. Power Electron., vol. 30, no. 9, pp. 4809 - 4818, Sept. 2015.

[5] Packiam Periasamy, N.K. Jain and I.P. Singh, "A review on development of photovoltaic water pumping system," Renewable Sustain. Energy Rev., vol. 43, pp. 918-925, March 2015.

[6] T.S. Franklin, J.J.F. Cerqueira and E.S. de Santana, "Fuzzy and PI controllers in pumping water system using photovoltaic electric generation," IEEE Latin America Trans., vol.12, no.6, pp.1049-1054, Sept. 2014.

[7] S. Jain, R. Karampuri and V.T. Somasekhar, "An Integrated Control Algorithm for a Single-Stage PV Pumping System Using an Open-End Winding Induction Motor," IEEE Trans. Ind. Electron., vol.63, no.2, pp.956-965, Feb. 2016.

[8] A. K. Verma, B. Singh, D. T. Shahani, A. Chandra and K. Al-Haddad, "Combined operation of a VSC based grid interfaced solar photovoltaic power generation system with night time application," IEEE PES General Meeting Conf. & Expo., National Harbor, MD, 2014, pp. 1-5.

[9] T. Esram and P. L. Chapman, "Comparison of photovoltaic array maximum power point tracking techniques," IEEE Trans. Energy Convers., vol. 22, no. 2, pp. 439–449, Jun. 2007.