Research Paper Technology

Comparative Analysis of Wavelet Packet Based Mc-Cdma with the Conventional Mc-Cdma System Using Huang Hilbert Transform.

Manmohan Singh chandoliya	EC, M.Tech ScholarYagyavalkyaInstitute of Technology Sitapur, ,drm-chandoliya@gmail.com,Jaipur,india
Anila Dhingra	EC,hod,Yagyavalkya Institute of Technology Sitapura , anilayit@gmail.com, Jaipur,india
Rajni Jainwal	EC, M.Tech ,Sanghvi Institute of Technology,rajnijainwal@gmail.com, RGPV University, India

ABSTRACT

Recently conventional Multi-carrier Code Division Multiple Access (MC-CDMA) techniques attract more attention of researcher's due to its high frequency spectrum efficiency and high data rate transmission. The aim of this work is to investigate the performance of multi-carrier code division multiple access (MC-CDMA) technique, which is a key technology for efficient and reliable communication due to its high frequency spectrum efficiency and high data rate transmission. This paper presents the performance of conventional MC-CDMA system, orthogonal wavelet packet based MC-CDMA system (WP-MC-CDMA), and Huang Hilbert Transformation (HHT) based MC-CDMA system. This scheme outperforms other two techniques, because this scheme is based on the knowledge of the instantaneous channel state information, or based on instantaneous imperfect channel estimates. Thus, by the knowledge of their channel gains or channel information, it can analyze the data more accurately. Hence, it is a more spectral efficient and high data rate transmission scheme compared to the conventional MC-CDMA and WP-MC-CDMA..

KEYWORDS AWGN Channel, Bit Error Rate, BPSK OFDM, MC-CDMA, HHT Based MC-CDMA, WP MC-CDMA, M Ray QAM, QPSK.

INTRODUCTION

MC-CDMA is a digital modulation technique where a single data symbol is transmitted at multiple narrowband subcarrier encoded with a phase offset of 0 and π The aim of this work is to investigate the performance of multi-carrier code division multiple access (MC-CDMA) technique, which is a key technology for efficient and reliable communication due to its high frequency spectrum efficiency and high data rate transmission. As demand for higher data rates is continuously rising, there is always a need to develop more efficient wireless communication systems. For this purpose, the MC-CDMA technology, which is the combination of both orthogonal frequency division multiplexing (OFDM) and CDMA, is considered to increase the potential benefits of the communication system.

In this thesis, we investigate the performance of conventional MC-CDMA system, orthogonal wavelet packet based MC-CDMA system (WP-MC-CDMA), and Huang Hilbert Transformation (HHT) based MC-CDMA system. Although, conventional MC-CDMA has already been discussed in the literature, and used as a benchmark for other two schemes. In addition, in the orthogonal wavelet packet based MC-CDMA system, we design a set of wavelet packets and used as the modulation waveforms in a multicarrier CDMA system. The WP-MC-CDMA shows their superiority over conventional MC-CDMA in terms of bit error rate (BER), and helps to mitigate the effects of interference and channel fading. Moreover, we also investigate the performance of Huang Hilbert Transformation based MC-CDMA. This scheme outperforms other two techniques, because this scheme is based on the knowledge of the instantaneous channel state information, or based on instantaneous imperfect channel estimates. Thus, by the knowledge of their channel gains or channel information, it can analyze the data more accurately. Hence, it is a more spectral efficient and high data rate transmission scheme compared to the conventional MC-CDMA and WP-MC-CDMA. Furthermore, a comparison is also made among all three schemes in terms of BER. Numerical and simulation results are presented to validate our proposed schemes.

Instead based on a spreading code. The narrowband subcarrier are generated using BPSK modulated signals, each at different frequencies which at baseband are at multiples of a harmonic frequency, 1 Consequently, the subcarriers are orthogonal to each other at baseband, and the component at each subcarrier may be filtered out by modulating the received signal with the frequency corresponding to the particular subcarrier of interest and integrating over a symbol duration. The orthogonality between the subcarrier is maintained if the subcarrier is maintained if the subcarrier frequencies are spread apart by the multiple of where F is an integer (e.g F=1,2…). The phase of each subcarrier corresponds to one element of the spreading code. For a spreading code of length N, there are N subcarriers. In other words, MC-CDMA transmitter spreads the original signal using a given spreading code in the frequency domain. In addition, a fraction of the symbol corresponding to a chip of the spreading code is transmitted through different subcarriers. For the MC-CDMA transmitter, it is essential to have frequency non-selective fading over each subcarrier. Therefore, if the original symbol rate is high enough to become subjected to frequency selective fading, the signal needs to be first serial-to-parallel converted before spreading over the frequency domain. The MC-CDMA basic transmitter structure is similar to the OFDM, the main difference being that the MC-CDMA transmits the same symbol in parallel through a lot of subcarriers, whereas OFDM transmits different symbols.

This paper presents performance analysis of wavelet packet Based MC CDMA in comparison with the conventional MC-CDMA, HHT Based MC-CDMA using Additive white Gaussian Noise (AWGN) Channel in term of BER, Throughput and Number of user.

SYSTEM MODEL

The CDMA system consists of transmitter as well receiver. The details of MC-CDMA receiver/transmitter and WP MC-CDMA receiver/transmitter are given in the section following.

2.1 MC-CDMA Trasnmitter

The input data symbol, b m [k], are assumed to be binary antipodal where k denotes the k th interval and m denotes the m th user. bm[k] takes on values +1 and -1 with equal a priori probability. The generation of MC-CDMA signal can be describe as follows. A signal data symbol is replicated into N parallel copies. The ith subcarrier of the parallel stream is multiplied by a chip, Cm[i], from a PN code. The transmitted signal consists of the sum of the output of these branches.

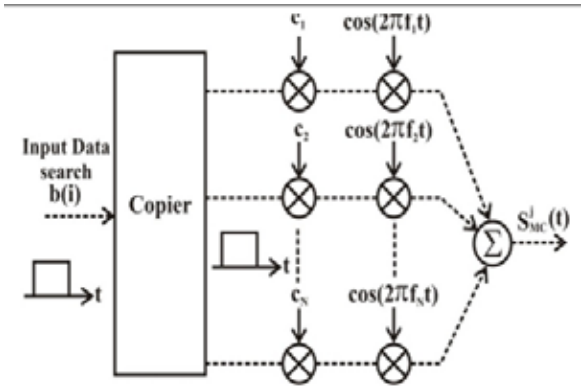

Fig.2.1. Transmitter of MC-CDMA

2.2MC-CDMA Receiver

The receiver picks up the signal r(t), which is then quadrature-mixed down to baseband using cosine and sine waves at the carrier frequency. This also creates signals centered on 2fc, so low-pass filters are used to reject these. The baseband signals are sampled and digitized using analog-to-digital converters (ADCs), and a forward FFT is used to convert back to the frequency domain. This returns N parallel streams, each of which is converted to a binary stream using an appropriate symbol detector. These streams are then re-combined into a serial stream, s (n) which is an estimate of the original binary stream at the transmitter [12].

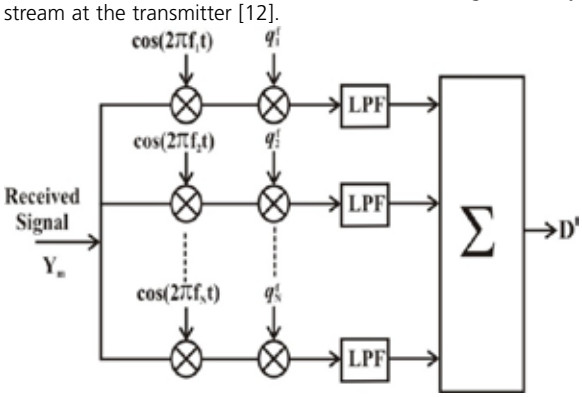

Fig.2.2 Receiver of MC-CDMA

2.3 Transmitter of WP MC-CDMA

Although a number of different schemes are proposed in the literature, the multicarrier CDMA schemes can be categorized mainly into two groups.

- First one spreads the original data stream using a given spreading code, and then modulates a different sub carrier with each chip (the spreading operation in the frequency domain).
- Second spreads the serial-to-parallel (S/P) converted data streams using a given spreading code, and then modulates a different sub carrier with each of the data stream (the spreading operation in the time domain).

One group spreads the user symbols in the frequency domain and the other spread user symbols in the time domain. Wavelet Packets have the property of both time and frequency localization.

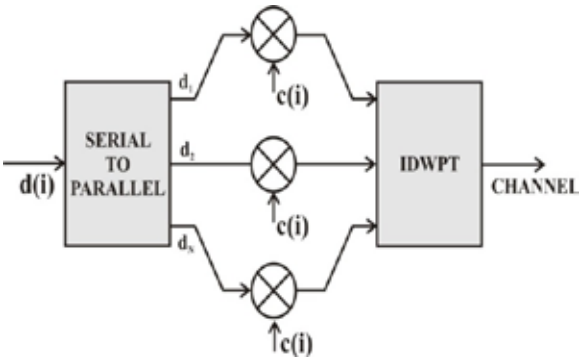

Fig.2.3 Transmitter of WP-MC-CDMA

2.4 Receiver of WP MC-CDMA

A series of delayed version of the received signals are detected by single path detectors. In Each single path detector, a DWPT (Digital Wavelet Packet Transform) block is used for demodulation of the signal for the corresponding resolved path. The multi-user interference can be effectively eliminated if the desired user spreading code is known, which is assumed true in the following. The DWPT demodulated signal is forwarded to the dispreading part to obtain a detected decision variable for the resolved path [13].

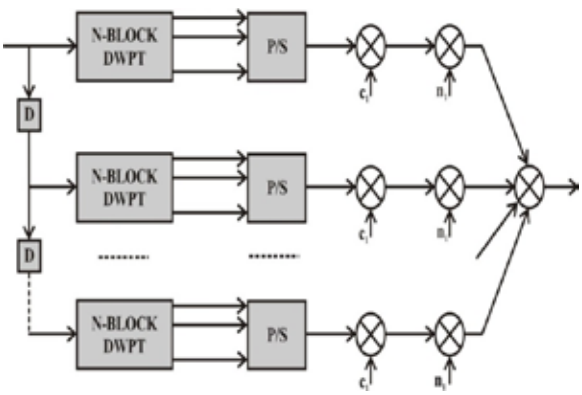

Fig. 2.4Receiver of WP- MC- CDMA

In this work, a frequency selective Rayleigh fading channel is considered, suppose each modulated subcarrier experience, independent and flat fading.

2.5 Hilbert transform based MC-CDMA

Hilbert transform of x can be thought as the convolution of x (t) with the function h(t)= 1\ πt. Because h (t)

is not integrable the integrals defining the convolution do not converge.

$$\hat{h}(t) = \frac{1}{\pi}\int_{-\infty}^{\infty} \frac{h(t)}{\tau - t} dt$$

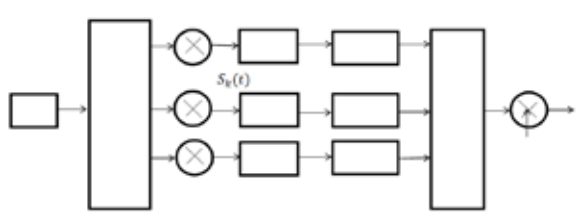

Fig 2 .5 Diagram of HHT based transmitter

2.6 Hilbert Transform using MC-CDMA Receiver

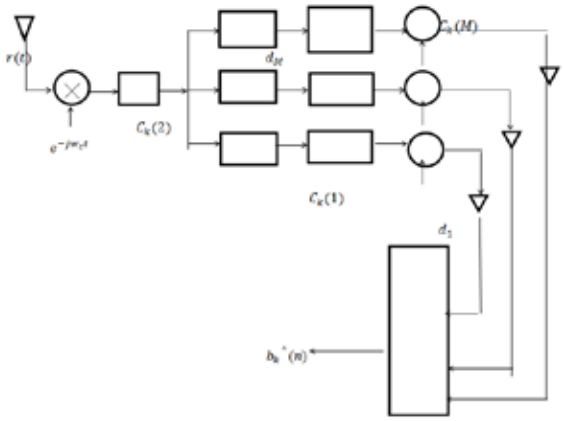

Fig.2.6 Diagram of HHT based MC-CDMA system

III RESULT AND DISSCUSION

1. MC-CDMA system

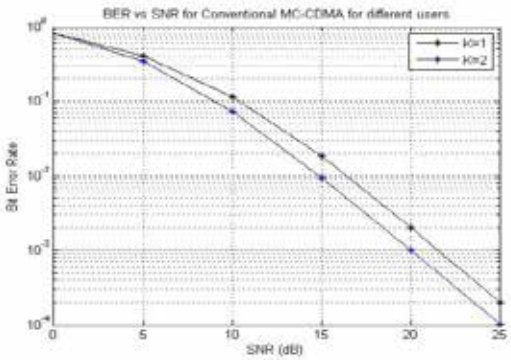

Fig.3.1 BER vs. SNR curves for different users of conventional MC-CDMA

Fig 3.1. Shows the bit error rate versus SNR curves for different users of conventional MC-CDMA scheme. It can be observed from the figure that as the number of users increases the bit error rate decreases significantly for broad range of SNR. For example, when the SNR =20 dB, the bit error rate is less than (BER <) for K=1, but at the same SNR =20 dB, the bit error rate is equal to (BER =) for K=2.

3.2. Wavelet packet based MC CDMA system.

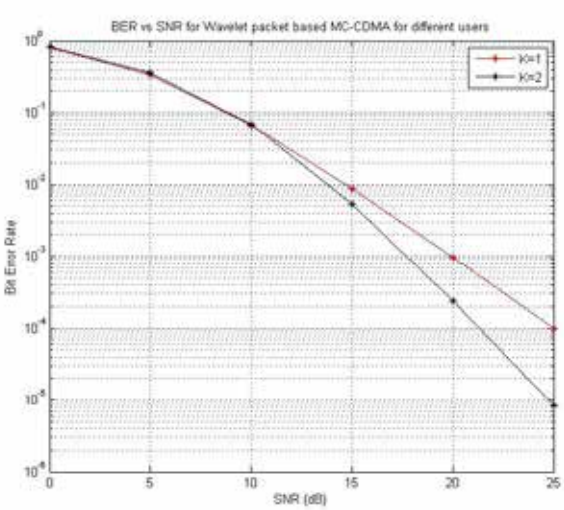

Fig.3.2 BER VS SNR for Wavelet packet based MC-CDMA for different users

Fig 3.2.shows the bit error rate versus SNR curves for different users of Wavelet packet based MC-CDMA scheme. It can be noted from the figure that as the number of users increases the bit error rate decreases in the whole range of SNR. Although, for the low SNR region (SNR=0dB ~10dB) the bit error rate performance is almost same as number of users increases. This is because in the low SNR region this scheme does not provide much improvement in the spectral efficiency, and hence shows the similar performance. However, in high SNR region the bit error rate performance increases significantly for different number of users. For example, when the SNR =25 dB, the bit error rate is equal to (BER =) for K=1, but at the same SNR =25 dB, the bit error rate is greater than (BER >) for K=2.

3.3. BER VS SNR for HHT based MC-CDMA for different users

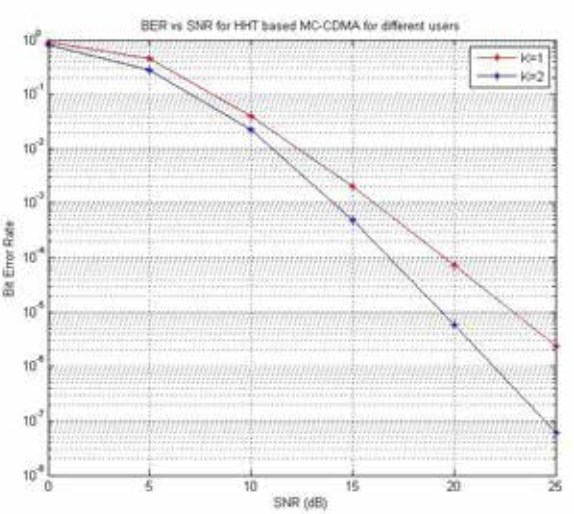

Fig.3.3 BER VS SNR for HHT based MC-CDMA for different users

Fig 3.3. Shows the bit error rate versus SNR curves for different users of HHT based MC-CDMA scheme. It can be noted from the figure that as the number of users increases the bit error rate decreases in the whole range of SNR. For the low SNR region (SNR=0dB ~10dB) the bit error rate performance is greatly improved as the number of users increases compared to wavelet packet based MC-CDMA. . For example, in the low SNR regime when the SNR =10 dB, the bit error rate is greater than (BER >) for K=1, but at the same SNR =10 dB, the bit error rate is greater than (BER >) for K=2. This is because HHT based MC-CDMA scheme in the low SNR region provides much improvement in the spectral efficiency, and hence outperforms the wavelet packet based MC-CDMA. In the high SNR region the bit error rate performance increases significantly for different number of users. For example, in the high SNR regime when the SNR =25dB, the bit error rate is greater than

(BER >) for K=1, but at the same SNR =25 dB, the bit error rate is greater than (BER >) for K=2.

III CONCLUSION

In this thesis, we investigated the performance of conventional MC-CDMA system, orthogonal wavelet packet based MC-CDMA system (WP-MC-CDMA), and Huang Hilbert Transformation (HHT) based MC-CDMA system. In particular, we have analyzed the performance of orthogonal wavelet packet based MC-CDMA system by designing a set of wavelet packets and used as the modulation waveforms in a multicarrier CDMA system. Moreover, we have also investigated the performance of HHT based MC-CDMA. Numerical and simulation results show that the HHT based MC-CDMA outperforms both WP-MC-CDMA and conventional MC-CDMA in terms of bit error rate (BER), and helps to mitigate the effects of interference and channel fading.

REFERENCES

[1] Rui Fa, and Pei Xiao, "Joint data detection and phase recovery for downlink MC-2D-CDMA systems," IEEE Transaction on communications, Vol. 57, No. 9, pp. 2782-2789, September 2009. | [2] Xiangbin Yu, and Guangguo Bi, "Performance of complex orthogonal wavelet packet based MC-CDMA system with space-time coding over rayleigh fading channel," in Proceeding IITA International Conference on Control, Automation and Systems Engineering," Zhangjiajie, July 2009, pp. 136-139. | [3] Ivan Cosvic, Michael Schnell, and Andreas Springer, "Combined equalization for uplink MC-CDMA in rayleigh fading channels," IEEE transactions on Communications, Vol. 53, No, 10, pp. 1609-1614, October 2005. | [4] Lie-Liang Yang, and LajosHanzo, "Performance of fractionally spread multicarrier CDMA in AWGN as well as slow and fast Nakagami-m fading channels," IEEE Transactions on Vehicular Technology, Vol. 54, No. 5, pp. 1817-1827, September 2005. | [5] Yewen Cao, TjengThiangTjhung, and Chi Chung Ko, "Performance of a new premulticoded multicarrier DS-CDMA system in Nakagami fading," IEEE Transactions on Communications, Vol. 55, No. 7, pp. 1363-1372, July 2007. | [6] Zhiqiang Wu, and Carl R. Nassar, "FD-MC-CDMA: A frequency –based multiple access architecture for high performance wireless communication," IEEE Transactions on Vehicular Technology, Vol. 54, No. 4, pp. 1392-1399, July 2005. | [7] Brandon Hombs, and James S. Lehnert, "Multiple-access interface suppression for MC-CDMA by frequency-domain oversampling," IEEE Transactions on Communications, Vol. 53, No. 4, pp. 677-686, April 2005. | | [8] Rabah W. Aldhaheri, and Ali H. Al-Qahtani, "Performance analysis of fixed and mobile WiMAX MC-CDMA-based system," in Proceeding 7th International Symposium on Wireless Communication Systems," York, September 2010, pp. 436-440. | [9] Hongbing Zhang, H. Howard Fan, and Alan R. Lindsay, "Receiver design for wavelet–based multicarrier CDMA communications", IEEE Transactions on Vehicular Technology, Vol. 54, No. 2, pp. 615-628, April 2005. | [10] Sandberg, S. D., and Tzannes M. A., "Overlapped discrete multitone modulation for high speed copper wire communications," IEEE Journal on Selected Areas on Communications, Vol. 13, No. 9, pp. 1571-1585, December 1995. | [11] RuiFa, and Pei Xiao, "Joint data detection and phase recovery for downlink MC-2D-CDMA systems," IEEE Transaction on communications, Vol. 57, No. 9, pp. 2782-2789, September 2009.Xiangbin Yu, and Guangguo Bi, "Performance of complex orthogonal wavelet packet based MC-CDMA system with space-time coding over rayleigh fading channel," in Proceeding IITA International Conference on Control, Automation and Systems Engineering," Zhangjiajie, July 2009, pp. 136-139. | [12] Paulo Silva, and RuiDinis, "Joint turbo equalization and multiuser detection of MC-CDMA signals with low envelope fluctuations," IEEE Transactions on Vehicular Technology, Vol. 58, No. 5, pp. 2288-2297, June 2005. | [13] Xiangbin Yu, Xiangdong Zhang, and Guangguo Bi, "Performance of an MC-CDMA system based on the complex wavelet packet and pre-equalization technique," IEE Proc. Communications, Vol. 151, No. 2, pp. 152-156, 2004. | [14] Christos Masouros, and Emad Alsusa, "Two-stage transmitter pre coding based on data-driven code-hopping and partial zero forcing beam forming for MC-CDMA communications," IEEE Transactions on Wireless Communications, Vol. 8, No. 7, July 2009. |