Research Paper Computer Science

Controlling Electronic Appliances Using Remote Devices

Chirag Deswal	Department of Computer Science, BharatiVidyapeeth's College Of Engineering, Delhi, India
Nikit T Nagrare	Department of Computer Science, BharatiVidyapeeth's College Of Engineering, Delhi, India
Gaurav Singh	Department of Computer Science, BharatiVidyapeeth's College Of Engineering, Delhi, India
Himanshu Sharma	Department of Computer Science, BharatiVidyapeeth's College Of Engineering, Delhi, India
Bindu Garg	Department of Computer Science, BharatiVidyapeeth's College Of Engineering, Delhi, India

ABSTRACT

The current trend in computing has launched us into a world of numerous, easily accessible computing devices connected to each other and to an increasingly ubiquitous network infrastructure which has created new opportunities in Information Technology. This trend has proven to be a solution to electricity costs which has experienced geometric increase in some countries. Leaving electronic devices on at home while away for work or when you embark on a trip has its inherent dangers, as well as rising energy consumption which amounts to waste. This paper presents a smart space of networked devices which is programmed with a mobile phone. We used object-oriented methodology to model the home appliances. The end-user can monitor and control his home appliances with his mobile phone from any location at any time. We examined some existing one-to-one based systems which assumed that the devices must have a mobile phone attached to the controller which leverages on the components of the 'second' phone to complete communication with the device. Here the system depended on the already built component of the used phone and if the second phone is removed the system will fail. In our research, we developed a polymorphous based system (one-to-many), which uses only a single phone. The user phone requires no other phone at the receiving end and can communicate with a controller with multiple ports making it polymorphous. We also developed custom-made module for reception of signals independent of the second phone. The system was implemented using Arduino microprocessor and a GSM module which forms the server side of the system. With our system, multiple appliances could be switched OFF or ON simultaneously compared with the existing ones that are capable of handling one appliance at a time.

KEYWORDS Ubiquitous computing; smart homes; microcontroller; remote control; mobile device

I. INTRODUCTION

Pervasive (ubiquitous) computers monitor and control the physical world through the use of sensors and actuators [1] .Smart living involves the remote control of consumer devices and media sharing. The new trend in Information and Communication technology is the provision of ubiquitous access to the networked electrical gadgets in the home using mobile phone. Most people nowadays have access to mobile phones and thus the world indeed has become a global village. At any given moment, any particular individual can be contacted with the mobile phone [2] . Today's smart phones are mobile always on networked computers that are with us all the time, they are already part of the digital home ecosystem. They resemble the consumer notion of universal remote controls, but are also personal and much more capable (e.g. processing, storage, multimedia, networking) and with support for a multitude of user interaction modalities (e.g. GUI, voice, gestures, touch). The emergence of smart spaces in the computer world is going to change users' experiences with the computers. Smart spaces are intelligent environments that are able to acquire and apply knowledge about its inhabitants and their surroundings in order to adapt to the inhabitants and meet the goals of comfort and efficiency [3]. These goals of comfort and efficiency are met through the use of mobile phones in the remote control of the smart spaces. These capabilities rely upon effective prediction, decision making, robotics, wireless and sensor networking, mobile computing, databases, and multimedia technologies. There are a number of benefits inherent to Smart Homes. First, for many, it's an important consideration - a Smart Home can save money. This is achieved through savings in heating, cooling, water, and other utility costs. Additionally, smart homes offer more enhanced security measures, reduce a number of rote tasks, and offer an increase in entertainment [4] . The smart environment perceives the state of the home through sensors and intelligently acts upon the environment through controllers. The smart home is equipped with sensors that record inhabitant interactions with many different devices, medicine-taking schedules, movement patterns, and vital signs. Smart environments can sense their own well-being and can request repair or notify inhabitants of emergencies. This paper focuses on remote monitoring and control of home electronic appliances through the use of mobile cell phone. The notion of smart spaces cannot be real without mentioning pervasive computing. Pervasive computing has launched us into a world of numerous, easily accessible computing devices connected to each other and to an increasingly ubiquitous network infrastructure. The vision of pervasive computing emerged from seamlessly integrating technologies into the fabric of everyday life [5] . Pervasive computing allows users to access and manipulate information

anywhere at any time while in control of some privacy issues [6] .

In this paper, a ubiquitous system is developed using Arduino microprocessor and a GSM module which forms the server side of the system. The Arduino is not just a controller but a single board microcomputer dedicated to embedded control applications. Therefore, the complexity of the system is managed on the software side; this ensures lower component size and increased system reliability. We developed a customized message system that communicates with a smart home, electrical gadgets via a GSM interconnection with a SIM card. A prototype of our system was carried out successfully. With our system, multiple appliances could be switched OFF or ON simultaneously compared with the existing ones that are capable of handling one appliance at a time.

II. RELATED WORK

A smart house is usually a computer-assisted dwelling unit that allows the occupants freedom and flexibility to live a safe andcomfortable life. Such homes save money and time and use energy efficiently [7]. Smart space technology is still at its infancy stage with a lot of research going on for its

advancement. However, success has been recorded in this field as some working smart homes are available. The features in the Aware Home Research Institute of Technology Georgia

include:

A. Gator Tech Smart House [8]: This smart house is situated in the University of Florida. It is designed to assist older persons and the disabled in maximizing independence and maintaining a high quality life. UF Gator-Tech features a home security monitor that continuously watches the doors and windows of the house. It transmits the security status of the doors and windows to the occupants e.g. "Locked door", "Unlocked window" etc.

B. Aware Home [9] in Institute of Technology, Georgia): Aware stands for the Alliance Working for Antiobiotic Resistance Education initiated by the California Medical Association (CMA) Foundation. The Aware Home Research Initiative (AHRI) at Georgia Institute of Technology is an interdisciplinary research endeavour aimed at addressing the fundamental technical, design, and social challenge for people in a home setting. Aware Home Research Initiative (Automatic Blind and Light System)uses simple sensors and actuators to maintain the optimal

C. iRoom [11]: iRoom is a specialist provider of both wireless and hardwired Internet into hotspot locations including resorts, hotels, motels, clubs, accommodation providers, student accommodation, hospitals and cafes. iRoom offer a high speed Wireless Broadband Hotspot Service, allowing their customers to become their own ISP. iRoom manages the system, providing technical support and equipment maintenance so that even non-technical persons without computer skills can operate it.

D. Bartech: Bartech is an intelligent fridge. In addition to advanced system of automated mini-bar provides connection to other room devices through a special microprocessor which has I/O connectors for external control. When a guest checks out at the front desk, the hotel property manager (PMS) sends the C-O to Bartech's computer and the Bartech software locks the door of the fridge. At preset time (determined by the hotel) other devices such as TV set, air conditioner, telephone, fax or light can be switched off.

E. Onity System: This is an energy management system that makes use of sensostat. Sensostat is an energy management device capable of sensing the occupancy status of a room. It has a setback controller. It uses a passive infrared (PIR) sensor and a flush-mouthed door switch. inn Pulse is the window-based software system used. The sensorstat interfaces with virtually all types of HVAC (Heating, Ventilation and air-conditioning) systems. In the paper of [2], the development and implementation of a Global System for Mobile Communication (GSM) based control system for electrical appliances was presented. The internal GSM module was used for receiving short message service (SMS) from user's mobile phone attached to the device which enables the controller to take further action like switching ON and OFF electrical appliances such as fan, air-conditioner, light, etc. The system was integrated with microcontroller and GSM network interface using C language. Figure 1 shows a block diagram of GSM based control system for electrical appliances with controller. The system was designed with the first mobile phone being used as a transmitting section from which the subscriber sends text messages that contain commands and instructions to the second mobile phone which is based on a specific area where the control system is located. The mobile phone as indicated in the block diagram is a Nokia 6100 mobile set. The received SMS message is stored in the SIM memory of the phone and then extracted by the microcontroller and processed accordingly to carry out specific operations. The relay driver (BUFFER ULN2003) is used to drive the relay circuits which switches the different appliances connected to the interface.

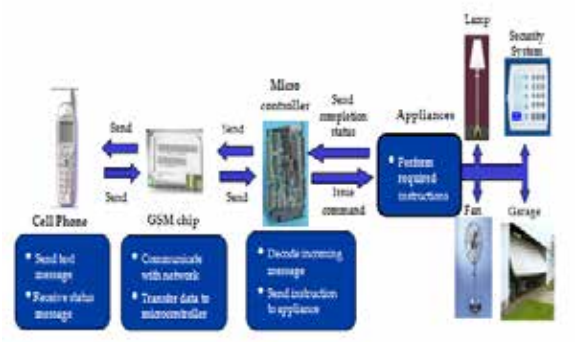

FIG 1 : System Overview

The LED is used to indicate the status of the operation performed by the microcontroller.

III . PROPOSED SYSTEM

In our proposed system, we developed a module different from the phone messaging system to enable us control the port or group of ports where we may need the message to be channeled , this way, an ubiquitous environment for the smart space to operate is provided. This in addition provides a user-friendly interface on the mobile phone of the user. Figure 2 shows a block diagram of the proposed system. We proposed home appliance control system based on GSM network technology for transmission of SMS from sender to receiver. SMS sending and receiving is used for universal access of appliances and allowing breach control at home. Appliance control subsystem enables the user to control home appliances remotely

The system is capable enough to give feed back to user about the condition of the home appliance according to the user's needs and requirements. The home appliance control system consists of the following components; Microcontroller: This unit contains the software components such as the home appliances control system through which the appliances are controlled.

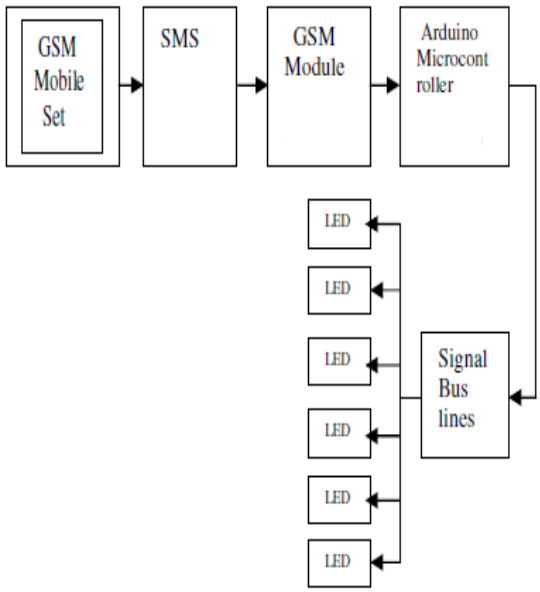

FIG 2 : Block diagram of proposed system

A. Electronic design of proposed system

The specification is broken down into smaller more manageable parts. The version of the functional diagram which shows the least detail is called the "Top-Level" functional diagram. Figure 3 shows top-level functional diagram. At the top-level, the simplest is to divide the product into their major constituent sub-assemblies. The sub-assembly partitioning method is adopted. In this case, the breakdown followed the convention of separating electronics from mechanics. The power supply is separated because it can be designed by a team which specializes on the design and development of power supplies.

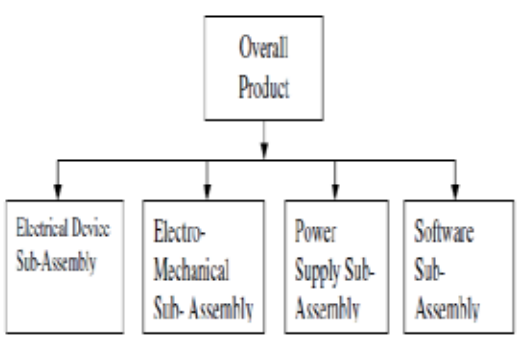

FIG 3 : Top level functional diagram

B. System specification
Performance

- **Input Signal**
  Low-level: 0 to 0.8 V
  High-level: 3 to 5.0 V.

- **Output Signal:**
  Low-Level: 0 to 0.8 V
  High-level: 3 to 5.0 V

Power Supply Interface Unit
- Electronics- AC to DC source obtained from a rectifier power supply
- Step-down transformation
- Voltage regulation from 5V and 12V IC regulators
- Special 3.3v-4.2v regulation for GSM cellular module

Sensor Interface Unit
- GSM Cellular Module.
- PIR Sensors.

Timing and Control Unit
- Microprocessor-based (Arduino ATmega328P, with java boot loader)

Electro-Mechanical Unit
- 5v Relay

Environment
- Temperature – 0 to 40° C

IV. IMPLEMENTATION

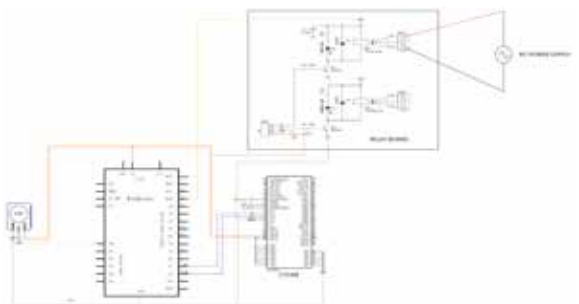

FIG 4 : Circuit Diagram

Automatically Controlling of the lights or any electronic appliances through PIR sensors (to detect infrared radiation) . also controlling of the electronic appliances remotely through devices like cellphone using hardware such as GSM Sim300 Module and controlling all these devices with the help of arduino microcontroller.

V. APPLICATIONS

This product is aimed toward average consumers who wish to control household appliances remotely from their cell phones provided that the appliances are electrically controllable. Some example of feasible appliances and applications under consideration include; enable/disable security systems, fans, lights, kitchen appliances, and adjusting the temperatures settings of a heating/ventilation/air conditioning system.

VI. CONCLUSION

In this paper, a novel architecture for low cost and flexible home control and monitoring system using Smart phone is proposed . mobile cellular networks such as 3G or 4G can be used to access the system. This paper has presented a remote control of home appliances using a mobile phone in an ubiquitous environment. The paper has been able to provide a polymorphous based system (one-to-many), which uses only a single phone. The paper has been able to provide a standard and easy to understand framework for developing and using electronic devices in our homes in such a way that energy is not wasted.

VII. RECOMMENDATIONS

We recommend the work in this paper to the power organizations and companies for exploitation in developing real life systems that can be used in controlling electronic appliances in homes from a single point i.e from a mobile across the cities and towns in a given geographical area.

REFERENCES

[1] J. Polastre, "A new vision for pervasive | computing: Moving beyond sense and send," | Sentilla Corp, 2007. | | | [2] O. Oke, J. O. Emuoyibofarhe, A. B. Adetunji, | "Development of a GSM based Control System | for Electrical Appliances," International | Journal of Engineering and Technology | Volume 3 No. 4, April, 2013. | | [3] D. J. Cook, and S. K. Das, "Smart | Environments: Architectures, Protocols and | Applications," John Wiley, 2004. | | [4] [4] R. C. Elsenpeter, T. J Velte, "Build Your | Own Smart Home," McGraw-Hill/Osborne | 2100 Powell Street, 10th Floor Emeryville, | California 94608 U.S.A, 2003. | | [5] M. Weiser, "The Computer for the 21st | Century," | http://www.ubiq.com/hypertext/weiser/sciAmD | raftz.html, 1991. | | [6] R. Grimm, "System Support for pervasive | applications," doctoral dissertation, Dept. of | computer Science and Eng., University of | Washington, 2002. | | [7] R. Sachdeva, "Smart House Features," | http:www.ehow.com/list_7423607_smarthouse- | features.html, October, 2013. | | [8] S. Helal, W. Mann, H. El-Zabadani, J. King, | Y. Kaddoura, and E. Jansen, "The Gator Tech | Smart House: A programmable pervasive | space, "IEEE Computer, vol. 38, pp. 55 – 66, | 2005. | | [9] G. A. Abowd, I. Bobick, I. Essa, E. Mynatt and | W. Rogers, "The Awarehome: Developing | technologies for successful aging," in | Proceedings of the 18th National Conference on | Artificial Intelligence, pp. 668-669, 2002. | | [10] A. Rowan and G. D. Abowd, "The | Awarehome, Automatic Blind and Light | System" | http://www.cc.gatech.edu/fce/ahri/projects/Aut | omatic_blind_and_Light_System.pdf, June, | 2006. | | [11] A. F. Johnson and T. Winograd, "The | Interactive Workspaces Project, Experiences | with ubiquitous computing rooms," IEEE | Pervasive Computing, vol. 1, pp. 67-74, 2002. | | [12] N. E. Osegi, "Workshop on Introduction to | Embedded Systems", College of Arts and | Science (CAST), Port-Harcourt, Rivers State | Nigeria, June, 2012. |