Research Paper Electronics

Energy Efficient Mobile Infrastructure (Green Radio)

Rahul Bhambere Department of Electronics Vivekanand Education Society's Institute of Technology Chembur, Mumbai-400 077

Sourabh Sawant Department of Electronics Vivekanand Education Society's Institute of Technology Chembur, Mumbai-400 077

Sarvesh Bhargav Department of Electronics Vivekanand Education Society's Institute of Technology Chembur, Mumbai-400 077

ABSTRACT

The number of users and the use of telecommunication systems are increasing rapidly and this result in greater demands on energy usage. Based on the extensive Life- cycle assessment (LCA) conducted by various network operators, it is learned that energy consumption in the usage phase of its radio access networks is the most imminent factor relating to impact on athe environment. The amount of CO2 emission is increasing in communication system, in parallel with increase in mobile consumers. It is observed that current wireless networks are not energy-efficient, mainly the base stations (BS). The need for restructuring of existing network architecture, we need to control the systems in every base station. This paper discusses the current energy consumption scenario in base station devices. It also describes innovative and promising method for enhancing the energy -efficiency of the wireless networks and developing solutions that reduce operating costs and effects on the environment.

KEYWORDS CO2 emission reduction, Energy efficient wireless network, Green Radio Technology, Power saving in base stations.

I. INTRODUCTION

Recent analysis by manufacturers and network operators has shown that current wireless networks are not very energy efficient, particularly the base stations by which terminals access services from the network. Green radio technology describes one of the most promising research directions in reducing the energy consumption as well as the carbon emissions of future base stations. Given the worldwide growth in the number of mobile subscribers, the move to higher-data-rate mobile broadband, and the increasing contribution of information technology to the overall energy consumption of the world, there is a need on environmental grounds to reduce the energy requirements of radio access networks [3]. The Green Radio program sets the aspiration of achieving a hundredfold reduction in power consumption over current designs for wireless communication networks. This challenge is rendered nontrivial by the requirement to achieve this reduction without significantly compromising the quality of service Experienced by the Network's users. Our objective is to reduce the energy consumption in base Stations and reduce the amount of CO2 emission. We have to keep controlling system in every base station for switching purpose. Apart from this, the architectural operation of present system is not energy-efficient. This leads to enormous amount of fuel wastage.

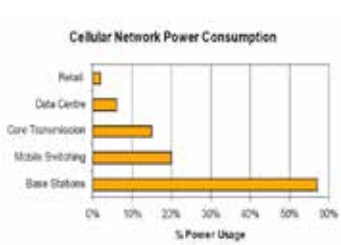

Fig. 1.1. Power consumption of a typical wireless cellular network.[1]

As Shown in Fig. 1.1. It clearly states that reducing the power usage of the base station will reduce the power consumption as it consumes the maximum power.

Fig. 1.2 shows the CO2 emissions per subscriber per year for base station and mobile handsets. It is seen that the operational energy for mobile handsets is much less than that of base station. It also shows that the manufacturing or embodied energy is greater in mobile handsets when compared to base station. Now considering one single tower, power is not only used for the signal transmission process, but also for running the cooling unit of generator and light indicator present along with lightning arrestor. Cooling unit consists of an Air-Conditioner and a Fan. Both Air-Conditioner and cooling fan operate throughout the day, irrespective of the climate change and temperature around the generator.

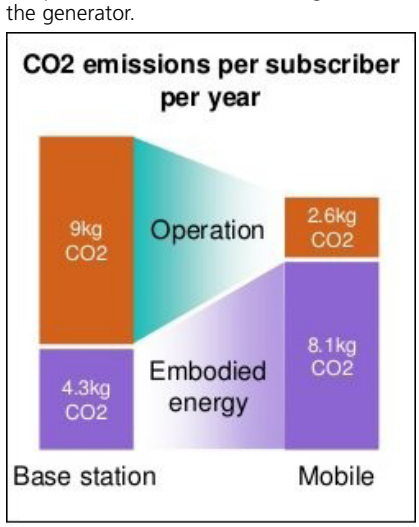

Fig. 1.2E. Co2 emissions per subscriber per year [5]

Also the light indictor (Red Light) present along with lightning arrestor glows day & night continuously without any rest. But, during day time, we are unable to notice this light, which is still operating. Thus, it can be seen that all these instruments consume more power (or energy) than that is actually required. From an operator's perspective, reducing energy consumption will also translate to lower Operating Expenditure (OPEX) costs. Reducing carbon emissions and OPEX for wireless cellular Networks are two keys behind the development of the Mobile Green radio program. This technology helps in minimizing the power consumption, reduces CO2 emission and prevents depletion of fossil fuel. The Green Radio project is pursuing energy reduction from two different perspectives. The first is to examine alternatives to the existing cellular network structures to reduce energy consumption. The second approach is to study novel techniques that can be used in base stations or handsets to reduce energy consumption in the network.

II. BASE STATION POWER EFFICINEY STUDIES

Recent studies have indicated that the access network is responsible of about 50-60% of global energy consumption of mobile communication. Considering the contribution of the mobile user is negligible, we can conclude that in cellular networks most of the energy is consumed by the base station. Power consumptions in a base stations can be sub-divided into four main components that are due to power amplifiers(65%),Air conditioning and cooling(17.5%),signal processing(10%) and power supply(7.5%).[4]. A base station consists of

- Transceiver-This equipment is used for generating a transmit signals to and decoding signals from mobile terminals.[1]
- Power Amplifiers-This devices amplifies the transmit signals from the Transceiver to a high enough power level for transmission, typically around 5-10 W.[1]
- Transmit Antennas- These are responsible for physically radiating the signals.
  During last years many strategies have been proposed in order to reduce the consumption of base station. As the power amplifier consumes the major portion of energy, the actions focus on the reduction of the activity of power amplifier with respect to traffic in a coverage area.
- Under Low traffic load condition[1]
- Under High traffic load condition[1]

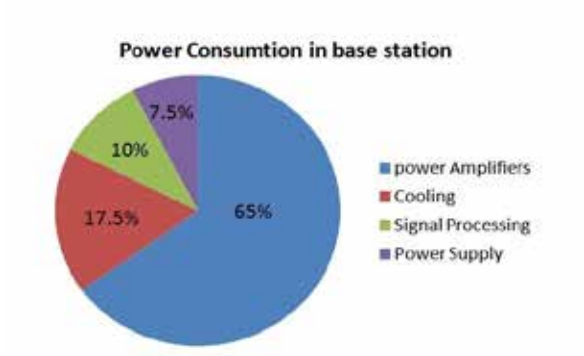

The current base station architecture is not energy efficient. The important drawback of the current system is that it is dependent on electrical grid power. In rural and remote areas, these base stations are not able to access a reliable electrical grid power. These base stations are powered by diesel generators, fuelled by oil. A huge amount of diesel is required by the diesel generator to generate power. The previous researches have dealt with only the reduction of power consumed due to the power amplifiers, but there is no such care taken to reduce the power consumed due to cooling section for generator room which includes fans and Air- conditioners. There is a light indicator (Red Light) present at the top of a communication tower which glows all the time which is unnecessary. The overall drawbacks can be listed as

1) The architectural operation of present system is not energy-efficient as it does not account for other parameters except power amplifiers section.

2) Every tower consumes 28 litres of diesel per day. [4]

3) One tower delivers 85 kg of carbon per day. [2]

4) The source for towers is based on the power requirement.

A critical mobile network consumes 40-50MW approximately, even excluding the power consumed by users' handsets.[5]

5) A typical diesel generator, used for supplying power for communication purpose, consumes seven million litres of diesel per day.[1]

6) There is not a single system which will handle all the issues including power amplifiers, cooling Unit, Lighting process and the grid power problem.

In India more than 4 lakhs towers are present. By the end of 2014 it is estimated to go beyond 5 lakhs.[1].With the increasing number of mobile towers and subscribers it is necessary to implement a system which will help to reduce the overall power consumption.

II. GREEN RADIO TECHNOLOGY

Green radio technology aims at two major reductions.

1) To provide a novel method for establishing Energy- Efficient wireless network by reducing the total power consumption in the base stations.

2) To achieve Eco-Balance in nature by reducing carbon-di-oxide emission.

The objective of this chapter is to explain the different concepts and techniques involved in this green radio technology and also scope & merits of this technology.

A. Proposed System

As discussed earlier the present system focuses only on the power reduction in terms of reducing the power consumed by the power amplifiers. The power amplifiers are switched off to reduce energy consumption, but the present system does not have any option to control the other parameters like cooling, light indicator. The technique used in this project is that power used in the base stations is reduced by controlling different parameters within the station and also the network topology. Change of network topology means that for a given control up to which it can operate. Thus, based on the user strength in a region, the number of towers in that particular region is turned ON and remaining Towers are kept in IDLE state. Once the highest limit of handling users of any tower is reached, the responder frequency is generated which is sensed by the controller unit at the base station. Upon getting this information, the neighboring remote tower is switched on by the base station. We use LDR to monitor the light intensity Around the tower to determine the day-break and night. We use two thermistors to determine temperature and moisture content.

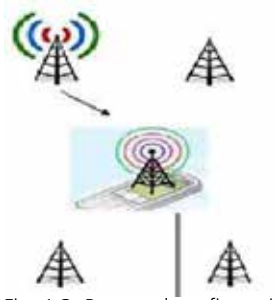

Fig. 1.3. Proposed configuration

In our model, we use four relays to monitor each of temperature, humidity, light intensity and frequency. For example light intensity above 1000 lumens is considered to be day-break, if not, its night. Hence light indicator will be turned ON automatically during night time. Similarly, based On Temperature and Humidity of the generator room, Air- Conditioner and Cooling-Fan will operate respectively. This is the basic operation of our model.

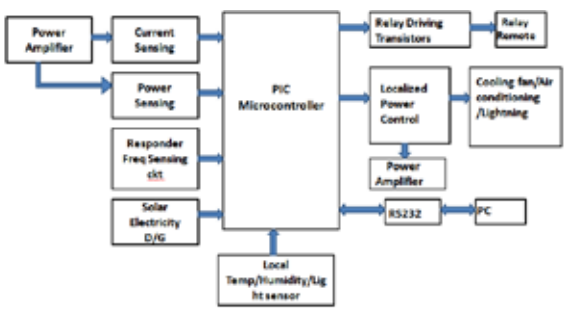

area only required amount of mobile towers is switched ON,B. B. Proposed Model instead of all the towers present in that region [1]. Here, all theC. towers are in IDLE state except those which are under operation. This technique helps in reduction of huge amount of power consumption, which in turn reduces fuel consumption and hence prevents the environment from the harmful effects of greenhouse gases. Secondly, the parameters which are to be controlled in base stations are the power supplied to cooling unit and lighting process. We can see that it reduces the power consumption by at least 30% (considering one single base transceiver station or BTS). So, on the whole, it contributes to a major portion of Power consumed all over the world. Thus, it reduces that major portion of power instead of being wasted. Our objective is to reduce the energy consumption in base stations and reduce the amount of CO2 emission. We have to keep controlling system in every base station for switching purpose. In this technology, the mobile-communication tower in an area is turned ON, based on the frequency of users present in that area. In general, within a pre-defined control area, there will be multiple towers operating (of same network type). And each tower has pre-defined user-strength capacity,

D. Software

Software can be implemented to have a look over the entire process. It will indicate the sections those are in working state within a tower. An operator can have a clear idea about all functioning just by looking at a screen.



III. MERITS OF THE TECHNOLOGY

1) The main advantage of this technology is the reduction of total power consumed by the base transceiver station of Wireless mobile networks
2) It offers a single program which will lead to reduce power consumed by every unit of base station.
3) This technology helps in reduction of the size of generator set, which leads to low - capital investment.
4) This technology helps in preventing depletion of fossil fuels.
5) This technology helps in maintaining and improving the ecological balance of the nature by reducing the CO2 emission.

IV. FUTURE SCOPE

This technology has huge scope of improvement in future, which will lead to fully implemented GREEN technology. Various other techniques of green radio technology like network topology restructuring, antenna design, switching Technique used, transmitter and receivers used, communication techniques can all be combined together to achieve complete energy-efficient communication system [2]. To start with, the leading way is with solar energy. A new technology of Solar Tree can be implemented in this project. The Solar tree has a unique feature of generating energy from sun as well as wind. The Solar Photo Voltaic uses sunlight to generate electricity thus eliminating dependency on grid power and diesel. It will provide the site with a stable and permanent source of power, minus noise pollution or toxic emissions. On an average, installation of this project can lead to reduction of 2.5 tons of CO2 emission per tower every year.Feederlsess sites can be also be deployed. The RF equipment is positioned close to antenna in these sites, minimizing cable loss and boosting power.

V. CONCLUSION

It can be seen that increase in mobile users leads to increase in power consumption, which in turn leads to emission of more and more CO2. This leads to global warming as CO2 is considered to be one of the green house gases. In order to control this effect, the major area to be controlled is to reduce power consumption. This can be reduced by taking various parameters into account such as the operation of Air Conditioner, cooling fan, light indicator and power amplifier. This project has aimed at reducing the power consumption by taking these parameters into account and the outcome has been positive. As per the objective, energy consumption will be reduced as much as possible and hence the emission of harmful green house gases will be reduced. This leads to an environmental friendly approach towards wireless communication.

REFERENCES

| [1] C. H. Harrold, —Green radio Radio Techniques to Enable Energy- Efficient Wireless Networks, Communications Magazine, IEEE June | 2011, vol. 49, pp. 46 – 54. | [2] T. Edler, —Green Base Stations — How to Minimize CO2 Emission in | Operator Networks, Ericsson seminar, Bath Base Station Conf., 2008. [3] K. Bumman, M. Junghwan, and K. Ildu, —EfficientlyAmplified, | IEEE Microwave Mag., vol. 11, no. 5, Aug.2010, pp. 87–100. [4] www.acedemia .edu/4660267/Traffic_Based_Energy_Saving [5] http://sc.enseeiht.fr/doc/Seminar_McLaughlin.pdf |