Research Paper Engineering

Loading Cell for the Measurement of Forces and Torques in the Prehensile Joint of Industrial Robots

Stroe Ioan | Transilvania" University of Brasov, B-dule Eroilor

ABSTRACT

In this study the structure of a robot arm loading cell used for torque and force determination is presented. A support structure that converts the mechanical stress into a measurable elongation by means of a force resistive sensor is introduced. Through the elastic structures and the layout on the three axes, as well as the layout of the measurement bridges, the influence of the remaining components of the force and torque tensor can be disabled. The finite element analysis of the elastic structure shows the stress state and the displacements after a load is applied, thus enabling the posibility of determining the implementation zone of the electroresistive sensors.

KEYWORDS | loading cell, mechanical stress, force, torque

INTRODUCTION

Auto adaptive control of a complex mechanical structure, such as a robot, need physical force measurements, forces produced during the gripper's movement and/or object manipulation. The development of control and adjustments of the sensor here in question have enhanced the popularity of the force and torque sensors, which will allow the implementation of the interactive control of grabbing actions, as well as the movement control along the programed tasks. The kinematic forces, as those acting in the robot's arm joint, are generated by mass object acceleration during manipulation, and the static forces are generated by the gripper's action on the object's surfaces during the manipulation process.

It is necessary to study the sensor's connection to the whole measurement chain. There is a tight connection between mechanical and electrical components of the sensor's structure. This connection must be taken into account during the design phase to obtain the desired sensor from all points of view.

THE DESIGN OF THE LOADING CELL

In order to determine the bending forces and torques an elastic frame is used, on which the electrorezistive sensors are mounted. The choice and shape of the frame material influences the force sensor's performances, especially in the dynamic regime of the measurement [4].

A loading cell with electroresistive sensors for mechanical torque measurements, which drives the joint of the robot hand is presented in figure 1.

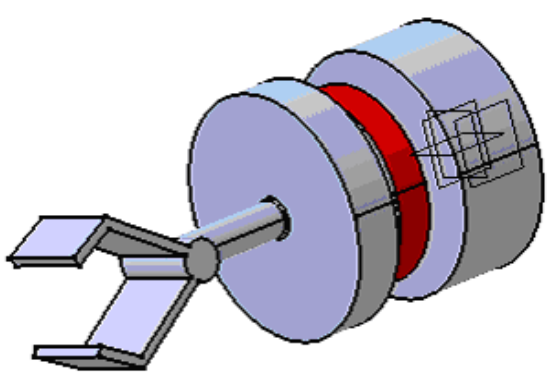

Figure 1: Location of the loading cell (in red color)

For actual measurements the electroresistive sensors sensors have to be mounted on a frame whose structure converts the mechanical load into a measurable elongation. These structure are called loading cells, their design depending on the application.

The information transmitted by the sensors define the magnitude of the force between the robot's structure and the forces acting on it. A set of linear relations describe the relationship between forces, torques and the data generated by the resistive sensors.

$$\begin{Bmatrix} +\propto & 0 & -\propto & 0 & +\alpha & 0 & -\alpha & 0 \\ 0 & 0 & 0 & +\beta & 0 & 0 & 0 & -\beta \\ 0 & +\beta & 0 & 0 & 0 & -\beta & 0 & 0 \\ 0 & -\gamma & 0 & +\gamma & 0 & -\gamma & 0 & +\gamma \\ 0 & 0 & +\delta & 0 & 0 & 0 & -\delta & 0 \\ +\delta & 0 & 0 & 0 & -\delta & 0 & 0 & 0 \end{Bmatrix} * \begin{Bmatrix} U_1 \\ U_2 \\ U_3 \\ U_4 \\ U_5 \\ U_6 \\ U_7 \\ U_8 \end{Bmatrix} = \begin{Bmatrix} F_1 \\ F_2 \\ F_3 \\ M_1 \\ M_2 \\ M_3 \end{Bmatrix} \quad (1)$$

In figure 2 the constructive form of the elastic frame used for determining the two or three components of the interaction force of the robot's gripper with the environment is presented [2].

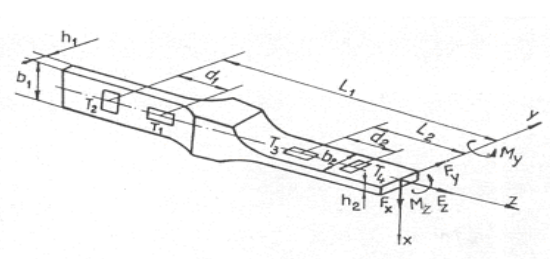

Figure 2: The constructive form of the elastic frame

The determination of the load matrix is relative simple. The structure of the three elastic elements used for static determinations are embedded at the ends. The maximum mechanical loads appear near the junction of the two surfaces where the sensors are mounted.

$$\sigma_1 = \frac{F_y \cdot l_1}{W_z} = \frac{6 \cdot l_1 \cdot F_y}{b_1 \cdot h_1^2} \quad (2)$$

$$\sigma_2 = \frac{F_x \cdot l_2}{W_z} = \frac{6 \cdot l_2 \cdot F_x}{b_2 \cdot h_2^2} \quad (3)$$

The relationship between the specific elongations of the elastic elements where the sensors (TER) are located and the interaction between the sensory elements are given by the coupling matrix in equation (4).

$$\begin{bmatrix} \varepsilon_1 \\ \varepsilon_2 \end{bmatrix} = \frac{6}{E} \begin{bmatrix} 0 & \frac{l_1}{b_1 \cdot h_1^2} \\ \frac{l_2}{b_2 \cdot h_2^2} & 0 \end{bmatrix} \cdot \begin{bmatrix} F_x \\ F_y \end{bmatrix} \quad (4)$$

In figure 3 the 3D constructive form of the sensory system used for forces and torque determinations is represented.

The loading cell has in its structure three elements (see figure 2), which are assembled at an angle of 120° from each other and are fixed at the exterior through two flanges, as seen in figure 3.

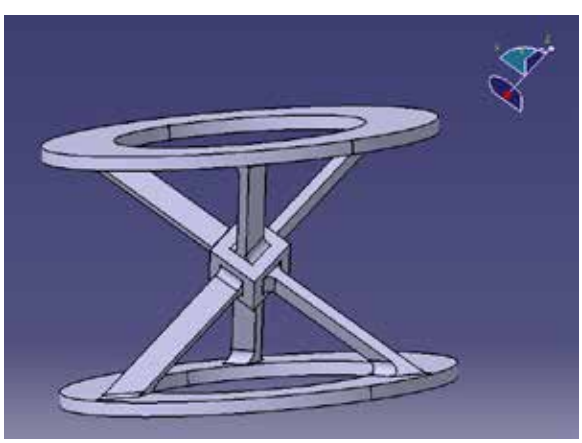

Figure 3: The loading cell

THE DETERMINATION OF THE STRESS AND THE DEFORMATION STATE

To highlight the stress and deformation state of the elastic elements that are part of the loading cell, the elastic elements are related to the axes of symmetry XYZ, where one flange is embedded, while the other one is subject to the mechanical load. For the determination of the forces and torques relative to the three axes the finite element method is used. The sensors are located on the elastic structures in those regions where the maximum stresses and deformations appear [1].

In figures 4 and 5 the sensory system on which forces and torques act on the x axis, F_x and M_x, are depicted.

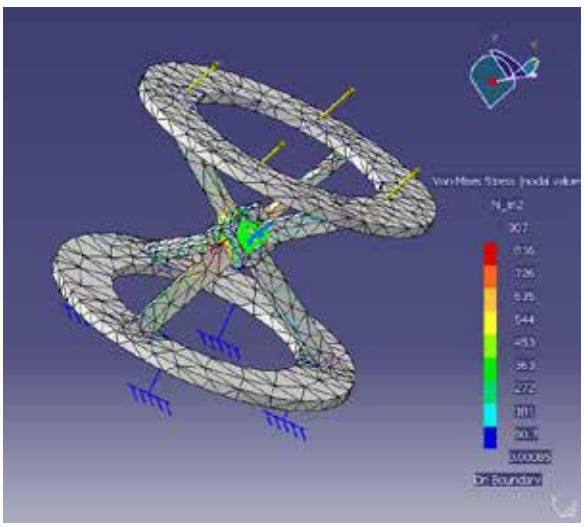

Figure 4: Stress and deformation on the x-axis, F_x

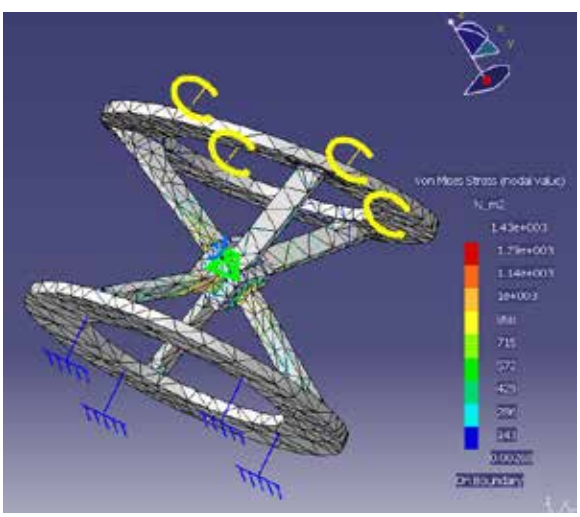

Figure 5: Stress and deformation on the x axis M_x

After the analysis of the stresses and deformation of the elastic structure, the electroresistive sensors can be implemented.
In figures 6 and 7 the sensory system that is subject to forces and torques on the Y axis, F_y and M_y, are given.
In figures 8 and 9 the forces and torques on the z axis are shown.

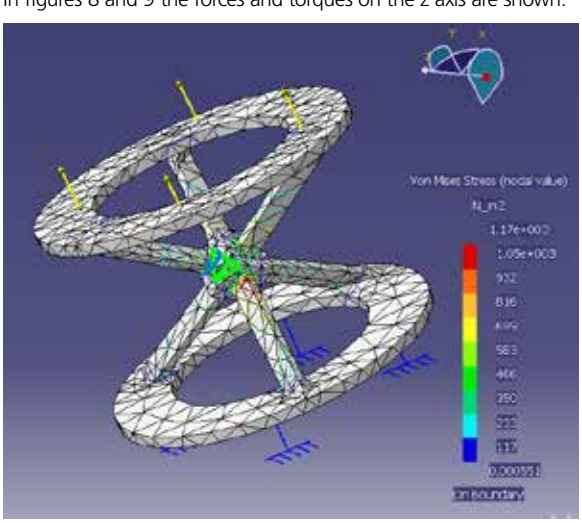

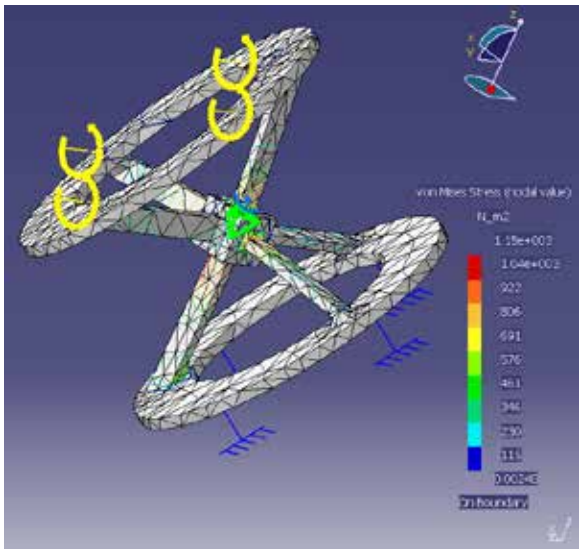

Figure 7: Stress and deformation of the y axis, M_y

THE SENSORS INTERFACING

To determine the forces and torques which appear as a results of a mechanical stress, each elastic element (see figure 2) on the three axes of the sensor will have two Wheatstone bridges. The output of the Wheatstone bridge is a value in the order of millivolts (mV) and it is an analogue signal. In figure 10 the block diagram of such a device with six channels can be seen [3].

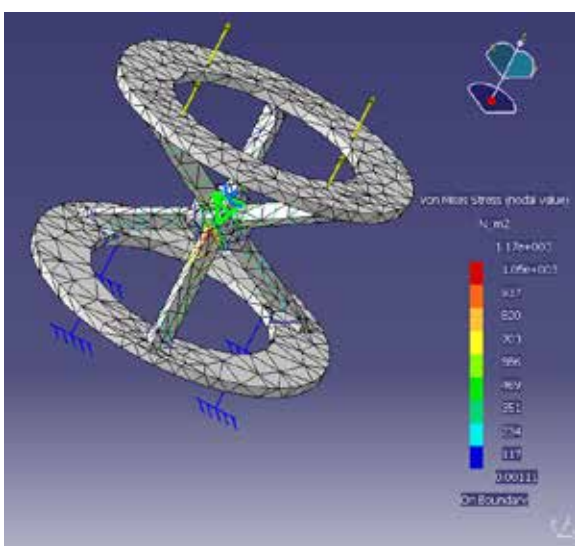

Figure 8: Tensions and deformation of the z axis, F_z

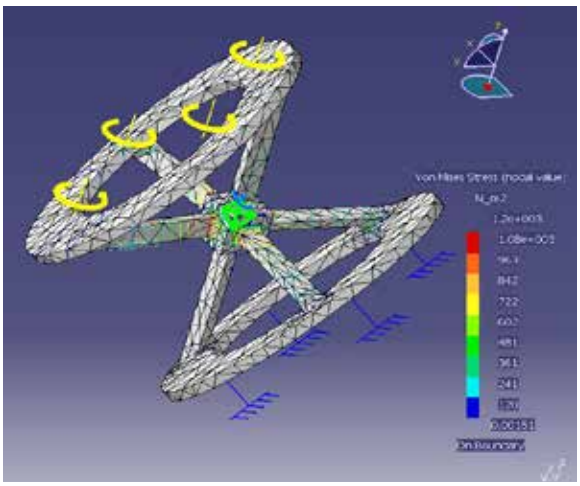

Figure 9: Stress and deformation of the z axis, Mz

CONCLUSIONS

Through the shape of the elastic structure and the layout on the three axes, as well as the layout of the measurement bridges, the influence of the other components of the force and torque tensor can be disabled. The finite element analysis made on the structure shows the state of the stresses and deformations as a result of the loading, enabling the determination of the implementation zone of the electroresistive sensors.

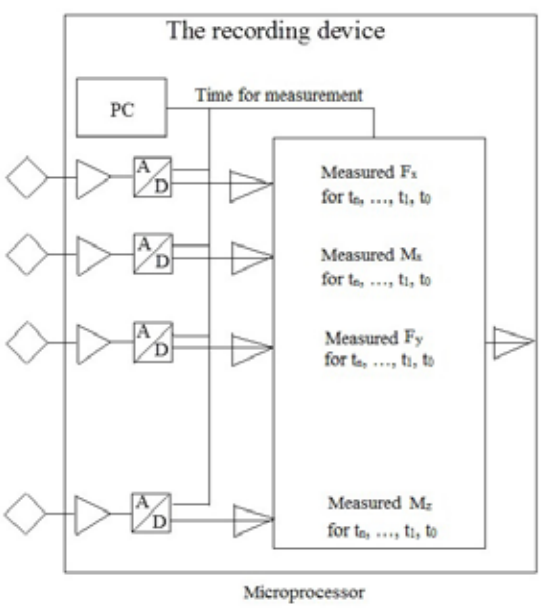

Figure 10: The interface of the block sensors

REFERENCES

[1]Mogan, Gh., Butnariu, S. [2014] Analiza cu elemente finite. Aplicatii in CATIA, Ed. Universitãăii Transilvania | [2]Stroe, I. (2001) Senzori pentru Robotica.,Editura Universitatii Transilvania. Brasov. | [3]Dumitriu A., Bucsan C., Demian, T. (1996) Sisteme senzoriale pentru roboti Editura Medro, Bucuresti. | [4]Ruocco, S. R. (1987) Robot sensors and transducers. Halsted Press New York – Toronto and Open University Press. |