Research Paper Technology

Route Optimization of Sprinkler Based on Directed Chinese Postman Problem

Zhao Hong School of Computer and Communication, Lanzhou University of Technology, No.287 Langongping Road Qilihe District, Lanzhou City, Gansu, P.R.China

Jiang Yu-chen School of Computer and Communication, Lanzhou University of Technology, No.287 Langongping Road Qilihe District, Lanzhou City, Gansu, P.R.China,

ABSTRACT

The route programming of sprinkler originates from the experience of staffs normally and the optimal scheme is achieved rarely. Aiming at minimizing the total driving length of sprinkler, a route optimization model based on the Directed Chinese Postman Problem theory was built in this paper. The model consisted of an integer programming model that transformed the connected directed graph to a Eulerian graph at minimum cost and a procedure to obtain the Eulerian circuit contained. The Eulerian circuit proved to be the shortest route required. Simulation experiment was used to verify the validation and feasibility of the model by a modeling and solving software Xpress-MP. The result showed that the total driving length was decreased effectively and the optimization model performed well by obtaining the global optimal solution accurately and rapidly when dealing with Directed Chinese Postman Problem.

KEYWORDS route programming, Directed Chinese Postman Problem, integer programming, Eulerian graph

INTRODUCTION

As an important environmental protection measure, the sprinkler undertakes the obligations to clean the road, eliminate the dust and lower the temperature in summer. However, unreasonable route programming of sprinkler will lead to traffic jams and waste of manpower and material resources. It is necessary to establish a reasonable route plan to complete the task and minimize the total driving length. This kind of route optimization problem was studied based on the Arc Routing Problem theory and some study results were proposed[1]. In this paper, the route optimization problem of sprinkler was studied based on the Chinese Postman Problem theory which is a classic Arc Routing Problem.

The Chinese Postman Problem was proposed by Professor Kwan Mei-ko in 1956[2]: a postman who wishes to travel along every street to deliver letters and come back to the post office tries to find the shortest route. This is obviously a graph theoretic problem: In a connected graph, each edge has a positive weight. The Chinese Postman Problem requires all the edges are included at least once in a tour of minimum cost, which had proved to be NP-hard[3]. Multiple algorithms such as Dynamic Programming Algorithm[4], Genetic Algorithm[5], DNA Algorithm[6] and Triplex DNA Model[7] had been investigated to solve the problem recently but all the performance was unsatisfactory. DNA Algorithm was confronted with complexity in coding and experiments with molecule operating. Triplex DNA Model had difficulties in weight coding once the differences among the weights were too large. Dynamic Programming Algorithm took too much computation time in large dimensionality cases.

Directed Chinese Postman Problem discussed on directed graph was a special form of the Chinese Postman Problem. The route plan of sprinkler was optimized through building a route optimization model based on Directed Chinese Postman Problem theory which was suitable to express the driving direction of sprinkler. Simulation experiment was used to verify the validation and feasibility of the model. Finally, the optimization method proposed was proved to perform well through obtaining the global optimal solution accurately and rapidly.

DIRECTED CHINESE POSTMAN PROBLEM THEORY

The definition of Directed Chinese Postman Problem in graph theory is described as follows: In a connected and directed graph G * MERGEFORMAT, each arc e * MERGEFORMAThas a positive weight $w(e)$ * MERGEFORMAT. A circuit that passes over every arc at least once and has a minimum total weight is required. To study the Directed Chinese Postman Problem, the definition of Eulerian graph in graph theory needs to be introduced.

Definition 1: A circuit that passes over every arc exactly once is named Eulerian circuit .

Definition 2: If a graph contains a Eularian circuit, it is a Eulerian graph.

Theorem: In a connected and directed graph, if every node v_i is equilibrated, that is the number of arcs arriving at v_i and leaving v_i is equal, the directed graph proves to be a Eulerian graph.

Proof : (1) Construct a track from the starting node v_oThe track v_{i_1} goes through the incidence edge and arrives at node v_i If v_i is equilibrated, the track can continue going through $e_2$and arrive at v_2. So go on, each edge is passed once. As the graph is connected, the track will finally return to v_0.

(2)If the track v_1 has visited every arc in the graph, it is an Eulerian circuit.

(3)Otherwise, remove v_1 from the original graph to get a subgraph. The nodes in the subgraph are obviously equilibrated. There is at least one common node v_i in v_1 and the subgraph. Repeat process (1) from v_i in the subgraph and a track l_2 can be obtained.

(4)If the combination of l_1 and l_2 is same as the original graph, it is an Eulerian circuit. Otherwise, Repeat process(3) and the Eulerian circuit will be obtained finally.

If the directed graph *G* contains a Eulerian circuit, the total

weight of the Eulerian circuit is equal to the sum of all arc weights which must be the optimal solution to the problem above. If there is no Eulerian circuit, the required circuit will re-pass the arcs that are already visited. The objective turns to minimize the total weight of such arcs that are visited repeatedly. Transform *G* into a Eulerian graph *G* by adding copies of arcs to equilibrate the nodes, whilst minimizing the total weights of these copies. The optimal solution is a Eulerian circuit based on *G*

PROBLEM DESCRIPTION AND MODEL FORMULATION

A. Route Optimization Problem of Sprinkler

The sprinkler starts from the starting point, sprinkles water over all the streets once during a single tour and eventually returns to the starting point. Determine a tour of minimum driving length for the sprinkler based on the identified street information which includes the street network, length of each street and prescriptive driving direction of the sprinkler namely for the wide high streets, the sprinkler needs to drive down both sides of the streets to sprinkle separately while for the narrow streets, a one-way pass is enough to complete the task.

B. Model Formulation

Let $E=(ISEC,ARCS,LEN)$ * MERGEFORMAT be the directed graph of the street network, where the node set $ISEC$ * MERGEFORMATdenotes the street intersections, the arc set $ARCS$ * MERGEFORMATdenotes the street network and driving direction of sprinkler and the arc length set LEN * MERGEFORMATdenotes the length of each street. The route optimization problem requires a tour that starts and finishes at the starting node, passes over every arc at least once and has a minimum total length. This problem equates to the Directed Chinese Postman Problem.

According to the analysis in Section II, an integer programming model is built to solve the problem by adding copies of arcs of minimum total length to transform the directed graph E * MERGEFORMATto Eulerian graph E' * MERGEFORMAT. For every $arc(i,j)$ * MERGEFORMATin $ARCS$ * MERGEFORMAT, an integer variable use_{ij} * MERGEFORMATis defined that indicates the number of times the tour uses this arc. This number includes one pass for sprinkling and other unproductive passages (copies of arcs). Define len_{ij} * MERGEFORMATindicating the length of $arc(i,j)$ * MERGEFORMAT. The Formula (1) is the objective function to minimize the total length driven.

$$\min imize \sum_{(i,j)\in ARCS} len_{ij} * use_{ij} \quad (1)$$

According to the theorem in Section II, the Formula (2) is the constraints that imply every node is equilibrated in the transformed Eulerian graph E' *

$$\forall i \in ISEC : \sum_{(j,i)\in ARCS} use_{ji} = \sum_{(i,j)\in ARCS} use_{ij} \quad (2)$$

As shown in Formula (3), the constraints include the sprinkling is obligatory and the are at least 1.

$$\forall (i,j) \in ARCS : use_{ij} \geq 1 \wedge use_{ij} \in N \quad (3)$$

The Eulerian graph E' and the minimum total driving length are obtained through the integer programming model. To further obtain the Eulerian circuit, a procedureis $add_path(i,TOUR)$ added. Starting from a node , it consists of using arcs that have not yet been used as far as possible. An arc that has been visited is marked to avoid re-using it. At the end, the procedure $add_path(i,TOUR)$ returns the obtained array . It is possible to show that always stops at the end in and forms a circuit. The procedure is first applied at the starting node. If visits all the arcs of E', $add_path(i,TOUR)$ this is a Eulerian cir cuit. Otherwise, is increased by executing from a node in *TOUR* that still has free arcs to visit. The pseudo-code for the core of the algorithm implemented with Mosel is following.

```
////////begin
ct=round(getsol(sum(i,j in ISEC)use(i,j)))
//Main loop of the algorithm
forall(i,j in ISEC|exists(LEN(i,j)))
COUNT(i,j)=round(getsol(use(i,j)))
TOUR(1)=1
ct-=add_path(1,TOUR)
//If TOUR does not visit all the arcs, execute //find_unused(-
    TOUR) to find the first node in TOUR //that still has free
    arcs to visit
while(ct>0)
ct-=add_path(find_unused(TOUR),TOUR)
//Function to add a sub-tour to the current TOUR
function add_path(node,J:array(range)
NEWJ:array(1..getsize(J))
pos=1//Insertion position pos
while(J(pos)<>node and pos<getsize(J))pos+=1
//Find a new path
cur=node;newct=0
while(sum(j in ISEC)COUNT(cur,j)>0)do
forall(j in ISEC)if(COUNT(cur,j)>0)then
COUNT(cur,j)-=1
newct+=1;NEWJ(newct)=j;cur=j
break
end-if
end-do
//Add the new path to main journey
i=getsize(J)-newct
while(i>pos)do
J(i+newct)=J(i)
i-=1
end-do
forall(j in 1..newct)J(pos+j)=NEWJ(j)
returned=newct
end-function
////////end
```

IV. SIMULATION EXPERIMENT

The experiment performed was supported by Lanzhou environmental health management office that provided the street information of a certain street block. A directed graph $G=(ISEC,ARCS,LEN)$ established to express the street information was shown in Figure 1. The sprinkler started at node 1.

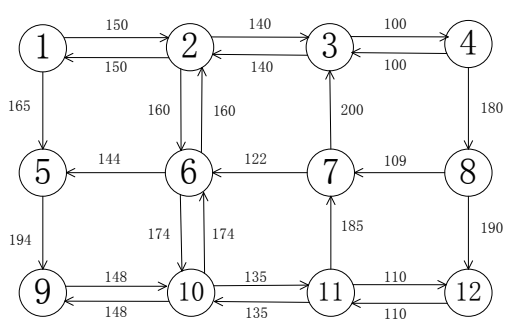

Figure 1 Directed graph of the street information

The experimental data was used to validate the optimization model by calling Xpress-MP[8] software in Mosel language. The visual development environment Xpress-IVE showed the minimum total driving length was 5661 meters. The correspond-

ing route plan was shown in Figure 2.

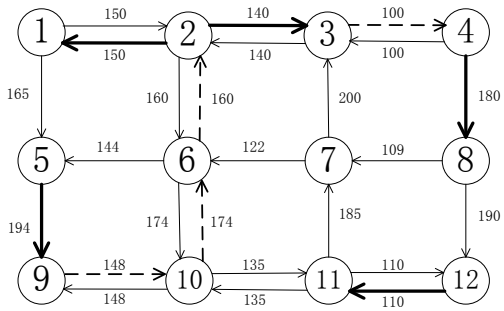

Figure 2 The optimal route of sprinkler driving

In the directed graph above, the bold arcs denoted the streets that were passed twice and the dotted lines for three times. The optimal route plan was:

$$1 \to 2 \to 3 \to 2 \to 3 \to 4 \to 3 \to 4 \to 8 \to 7 \to 3 \to 4$$

$$\hookrightarrow 8 \to 12 \to 11 \to 10 \to 6 \to 5 \to 9 \to 10 \to 6 \to 10$$

$$\hookrightarrow 9 \to 10 \to 11 \to 12 \to 11 \to 7 \to 6 \to 2 \to 6 \to 2 \to$$

$1 \to 5 \to 9 \to 10 \to 6 \to 2 \to 1$ The total driving length of the traditional route plan originated from working experience was 5987 meters. Thus, the total driving length was decreased effectively and the validation and feasibility of the optimization model were verified.

V. COMPARISON EVALUATION

To verify the superiority of the optimization model in dealing with such Directed Chinese Postman Problem, a further experiment with Genetic Algorithm was performed. As a heuristic algorithm, Genetic Algorithm tried to find the most approximate optimal solution to the problem. To this problem, the solution space could not be coded directly and the fitness function was hard to be designed correctly as the copies were uncertain. Therefore, the directed graph required a specific transformation first and the shortest paths between each node needed to be searched through a procedure. The route solution obtained was shown in Figure 3 and the detailed experimental data was shown in Table 1. The optimization model outperformed Genetic Algorithm by simple operation and obtaining the global optimal solution accurately and rapidly.

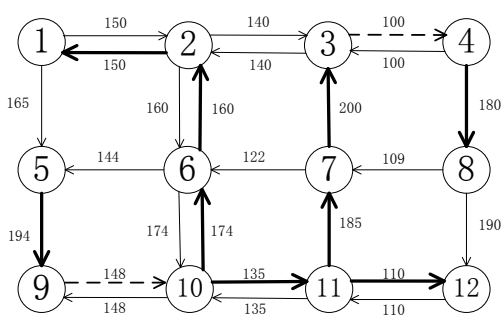

Figure 3 The route solution with Genetic Algorithm

Table 1 Experimental data of Genetic Algorithm

Initial population	100
Largest generation	100
Crossover probability	0.8
Mutation probability	0.005
The route solution	1→2→3→4→8→7→6→5→9→10→6→10→6→2→6→2→1→5→9→10→9→10→11→7→3→4→3→4→8→12→11→12→11→10→11→7→3v2→1
Total route length	5707

VI. CONCLUSIONS

In this paper, we optimized the route programming of sprinkler through building an optimization model of the Directed Chinese Postman Problem. The experimental results indicated the global optimal solution was obtained with fast computing speed. The total driving length of sprinkler was reduced, which was of practical significance in fuel saving and environment improving.

VII. ACKNOWLEDGEMENTS

This work is supported by the Natural Science Foundation of China under Grant No. 61262016, the University Foundation of Gansu Province under Grant No. 04-056001, the Natural Science Foundation of Gansu under Grant No. 1208RJZA239, and the Technology Project of Lanzhou under Grant No. 2012-2-64.

REFERENCES

[1] Lopes, R. B., Plastria, F., Ferreira, C., & Santos, B. S. (2014). Location-arc routing problem: Heuristic approaches and test instances. Computers & Operations Research, 43, 309-317. | [2] Beardon, A. F. (1983). The Geometry of Discrete Groups. Graduate Texts in Mathematics (Vol. 91). New York: Springer. | [3] Papadimitriou, C. H., & Steiglitz, K. (1998). Combinatorial optimization: algorithms and complexity. Courier Dover Publications. | [4] Zhang, J. (2011). Modeling and Solution for Multiple Chinese Postman Problems. In Advances in Computer Science, Environment, Ecoinformatics, and Education (pp. 520-525). Springer Berlin Heidelberg. | [5] Jiang, H., Kang, L., Zhang, S., & Zhu, F. (2010). Genetic algorithm for mixed Chinese postman problem. In Advances in Computation and Intelligence (pp. 193-199). Springer Berlin Heidelberg. | [6] Zoraida, B. S. E. (2011, July). DNA algorithm employing temperature gradient for chinese postman problem. In Process Automation, Control and Computing (PACC), 2011 International Conference on (pp. 1-4). IEEE. | [7] Yang, J., Yin, Z. X., & Huang, K. F. (2012). The Traveling Salesman Problem base on Triple-stranded DNA Structure model. In Informatics in Control, Automation and Robotics (pp. 769-775). Springer Berlin Heidelberg. | [8] Hong, Z. H. A. O., & Yan-min, Z. H. A. N. G. (2013). Study on Cost Optimization in Logistics Distribution Process. Journal of Next Generation Information Technology, 4(7). |