Research Paper Engineering

Desing and Implementation of PV System using Quasi Z-Source Inverter for Distributed Applications

C.Dinakaran PG Scholar, Department of EEE, S.V.C.E.T, Chittoor

Prof.K.Eswaramma Head of Department, Department of EEE, S.V.C.E.T, Chittoor

ABSTRACT

The voltage fed Quasi Z-Source inverter has been proposed in this paper for Photovoltaic applications. By using Quasi Z-Source inverter in Photovoltaic Systems for improved Buck and Boost capability and reliability, dynamical characteristics of the Quasi Z-Source inverters are investigated by small signal analysis. Based on the dynamic model stand alone operation and grid connected operation with closed loop control method are carried out which are the two necessary operation modes of distributed generation in distributed power grids. The modulation index and shoot through duty ratio of Quasi Z-Source inverter, Constant capacitor voltage control method is proposed in a two stage control manner. Simulation results are carried out in this paper.

KEYWORDS Inverter, Distributed generation, Quasi Z-Source inverter, PV System.

I. INTRODUCTION

More Efforts are now being put into distributed power generation of renewable energy sources (RESs), such as photovoltaic (PV), wind power and fuel cells which are sustainable and environmental friendly. Practically, several distributed generations (DGs) consist of distributed power grid and further construct micro grid with local loads and managements. To ensure proper performance of the micro grid, DG is usually required to work in two modes: stand-alone or grid connected [1]. As an interface between RES and distributed power grid, the performance of power electronic converters becomes critical.

Z-Source inverters are new single-stage electronic power converters with both voltage buck and boost capabilities that have been proposed for use in photovoltaic energy conversion systems and motor drives with a front-end diode rectifier [2]-[3]. Compared with traditional voltage-source (VS) and current-source (CS) inverters, the sole difference of a Z-source inverter is its X-shaped impedance network implemented using a split-inductor and capacitors, connected between the input power source and inverter circuit, as shown in Fig. 1 for a VS-type Z-source inverter. This unique impedance network allows both switches within the same phase-leg (e.g., S1 and S4 in Fig. 1) to be turned ON simultaneously to introduce a shoot-through (dc bus short-circuiting) state for boosting the inverter output voltage. Multiple shoot-through states can conveniently be introduced to traditional continuous and discontinuous pulse-width modulation (PWM) strategies for controlling a Z-source inverter with all steady-state performance merits of these PWM strategies retained.

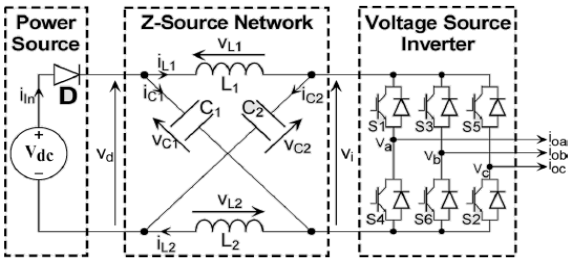

Fig.1. Topology of VS-type Z-source inverter

With a set of new topologies of the impedance networks, a class of quasi-Z-source inverter (qZSI) has been derived from the original ZSI and applied to DG applications [4]. A voltage-fed qZSI (shown in Fig. 2) was proposed for PV applications because of continuous input current and reduced passive component (capacitor) rating capacitor voltage on C2 is much less than that on C1 during operating and this feature leads to lower manufacture cost. This paper further investigates the detailed modeling and control issues of the qZSI to be applied in DG applications. The dynamic model of the asymmetric quasi-Z-source network is constructed by small-signal analysis [5]-[7].

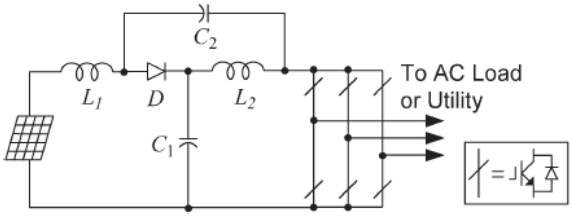

Fig.2. Voltage-fed qZSI with continuous input current for PV application

II. DC-SIDE TRANSIENT PHENOMENON OF Z-SOURCE IMPEDANCE NETWORK

Small-signal analysis is a mathematical method for studying the system dynamic response when perturbed by a small disturbance, while signal-flow-graph analysis is a nonlinear graphical way for representing control systems and power converters with multiple switching states and a large number of system components. These subsections focus only on the dc-side of the Z-source inverter with the inverter circuit and external ac load replaced by a single switch and current source connected in parallel (see Fig. 3) for representing a shoot-through (non-shoot through) state when the switch is ON (OFF). Using this simple representation, the transient phenomenon identified here is clearly associated with only the Z-source network since details of the inverter three-phase PWM are not considered.

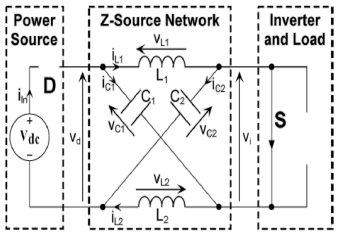

(a)

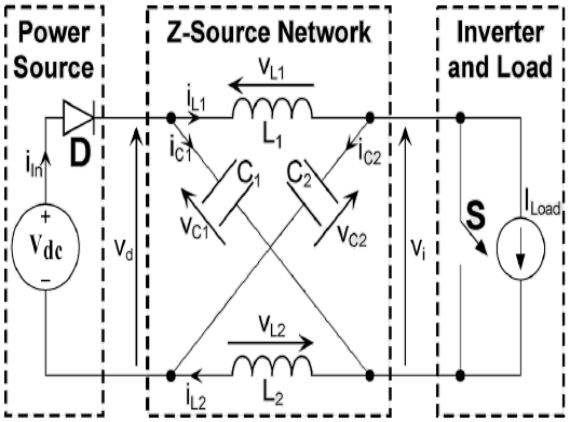

(b)

Fig.3. Equivalent representations of VS-type Z-source inverter when in the (a) Shoot through and (b) non-shoot-through states.

III. DYNAMIC MODELING OF THE QUASI-Z-SOURCE NETWORK

The relationship of v_{in} and i_{in} will be determined by specified energy source nature. For dc-side modeling, the three-phase inverter bridge and external ac load are represented by a single switch and a current source connected in parallel. When operating at shoot-through states, the ac load terminals are shorted through both upper and lower devices of any phase leg(s); therefore, the single switch is ON, and the equivalent circuit of the qZSI is shown in Fig. 4(a). When operating at non-shoot-through states (i.e., six active states and two conventional zero states where either all the upper devices or all the lower devices are gated on), the single switch is OFF, and the equivalent circuit of the qZSI is shown in Fig. 4(b).

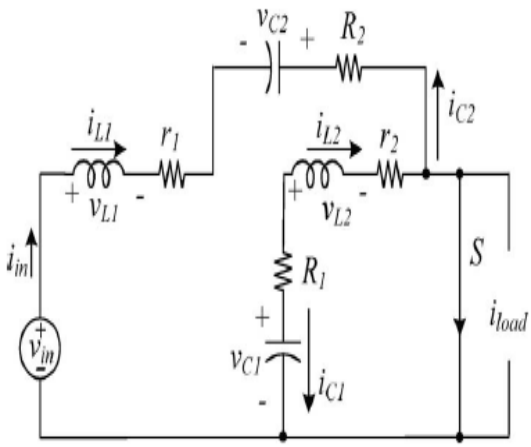

(a)

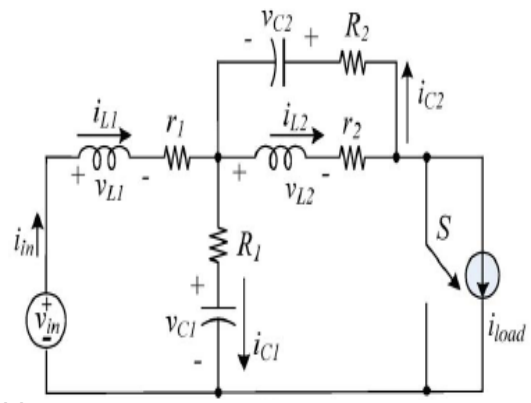

(b)

Fig.4. Equivalent circuit of quasi-Z-source network when in the (a) shoot through and (b) non-shoot-through states.

IV. VOLTAGE BOOST, STRESS AND CURRENT RIPPLE

A simple boost control method was used to control the shoot-through duty ratio. The Z-source inverter maintains the six active states unchanged as in traditional carrier-based pulse width modulation (PWM) control. In this case, the shoot-through time per switching cycle is constant, which means the boost factor is a constant. Therefore, under this condition, the dc inductor current and capacitor voltage have no ripples that are associated with the output frequency. For this simple boost control, the obtainable shoot-through duty ratio decreases with the increase of M, and the resulting voltage stress across the devices is fairly high. To obtain the maximum voltage boost presents the maximum boost control method as shown in Fig. 5, which shoots through all zero-voltage vectors entirely. Based on the map in Fig. 5, the shoot-through duty cycle D_0 varies at six times the output frequency. The voltage boost is inversely related to the shoot-though duty ratio, the ripple in shoot-through duty ratio will result in ripple in the current through the inductor, as well as in the voltage across the capacitor. When the output frequency is low, the inductor current ripple becomes significant, and a large inductor is required.

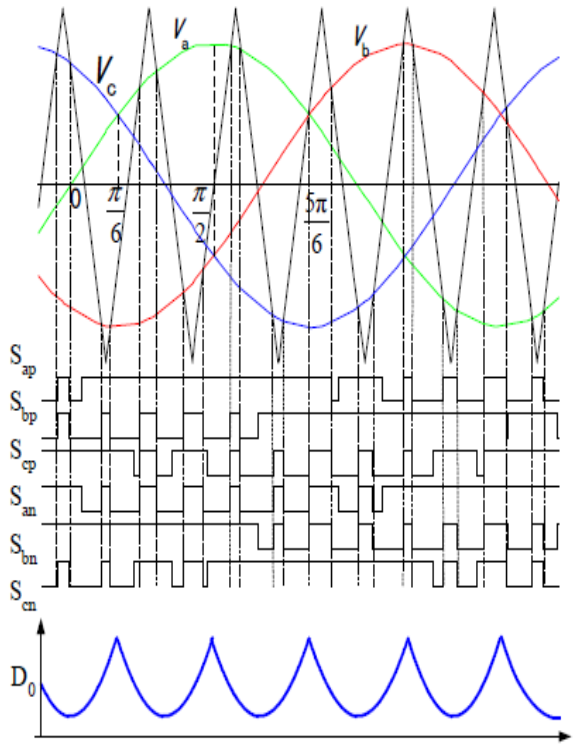

Fig.5. Maximum boost control sketch map

V. MAXIMUM CONSTANT BOOST CONTROL

In order to reduce the volume and cost, it is important always to keep the shoot-through duty ratio constant. At the same time, a greater voltage boost for any given modulation index is desired to reduce the voltage stress across the switches. Figure 6 shows the sketch map of the maximum constant boost control method, which achieves the maximum voltage gain while always keeping the shoot-through duty ratio constant. There are five modulation curves in this control method, three reference signals V_a, V_b, V_c and two shoot-through envelope signals V_p and V_n. When the carrier triangle wave is greater than the upper shoot-through envelope V_p or lower than the lower shoot-through envelope V_n the inverter is turned to a shoot-through zero state. In between, the inverter switches in the same way as in traditional carrier-based PWM control.

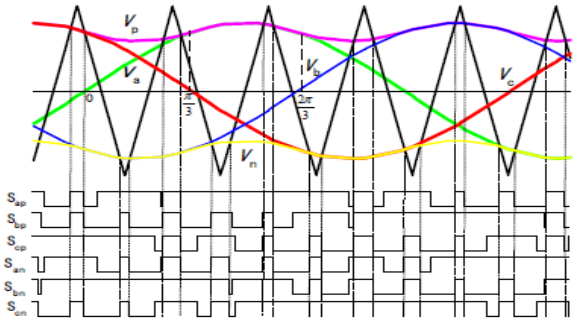

Fig.6. Sketch map of constant boost control

Because the boost factor is determined by the shoot-though duty cycle, the shoot-through duty cycle must be kept same in order to maintain a constant boost. The basic point is to get the maximum B while keeping it constant all the time. The upper and lower envelope curves are periodical and are three times the output frequency. There are two half-periods for both curves in a cycle as shown in fig.7

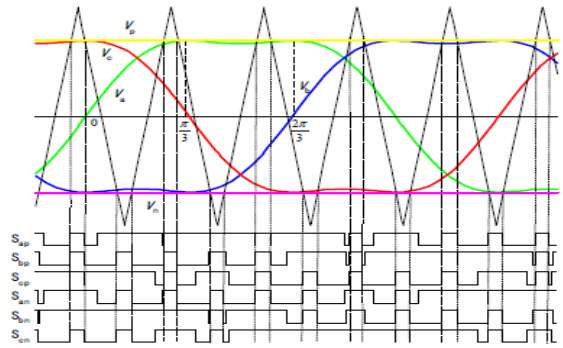

Fig. 7 Sketch map of constant boost control with third harmonic injection

VI. TWO-STAGE CONTROL METHODOLOGY FOR QZ-SI-BASED DG

Fig. 8 shows the overall system configuration of the proposed qZSI, where L_f , R_f , and C_f are the inductance, capacitance and stray resistance of the filter respectively and v_{oj}, i_{Cj}, v_{ij}, i_{Lj}, i_{oj}, and i_{gj} are the load voltage, capacitor current of the filter, output voltage of the inverter, inductor current of the filter, load current and grid current respectively. All in three phases (j = a, b, c). CB stands for circuit breaker. CB1 is ON and CB2 is OFF when the qZSI works under voltage control mode and CB1 is OFF and CB2 is ON when the qZSI is under current control mode. It should be pointed out that, although one qZSI with variable resistive load is used to demonstrate the voltage control strategy, the controller design principle is still applicable to qZSIs that are connected in parallel.

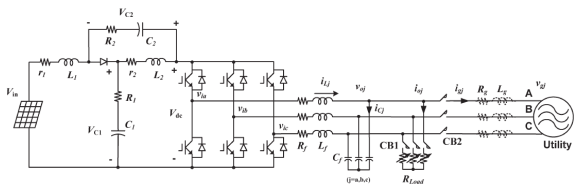

Fig. 8. System configuration of the proposed qZSI for DG applications

VII. SIMULATION RESULTS & DISCUSSION

A. SIMULATION CIRUCIT FOR QUASI Z-SOURCE INVERTER USING DC SOURCE

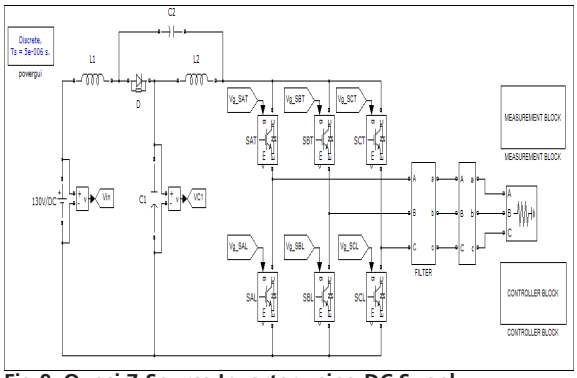

Fig.9. Quasi Z-Source Inverter using DC Supply

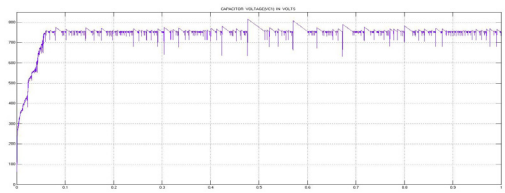

Fig.10. Capacitor Voltage Output

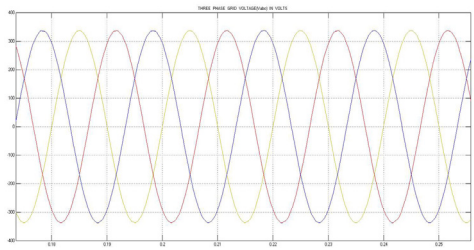

Fig.11. Three Phase Grid Voltage

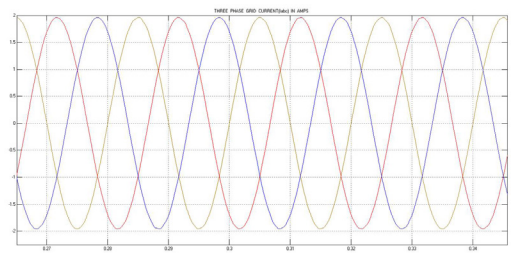

Fig.12. Three Phase Grid Current

B. SIMULATION CIRUCIT FOR QUASI Z-SOURCE INVERTER USING PV MODULE

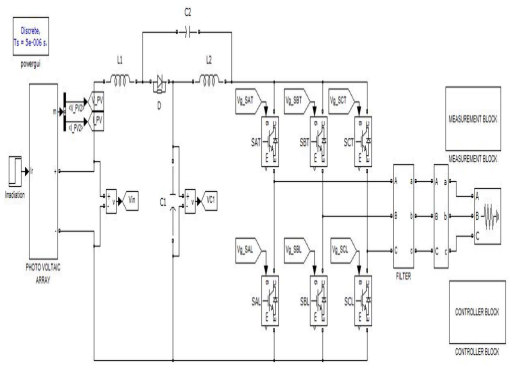

Fig.13. Quasi Z-Source Inverter using PV Module

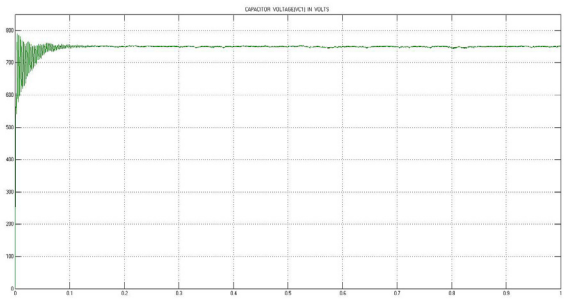

Fig.14. Capacitor Voltage Output

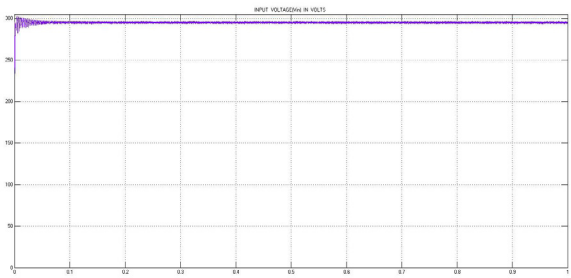

Fig.15. Input Voltage

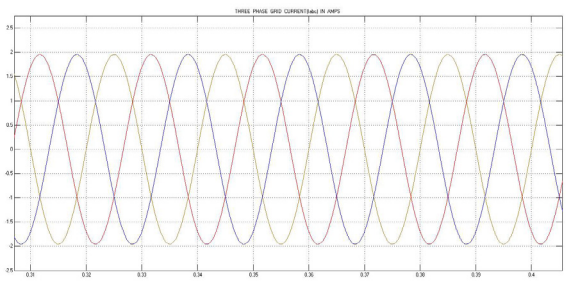

Fig.16. Three Phase Grid Current

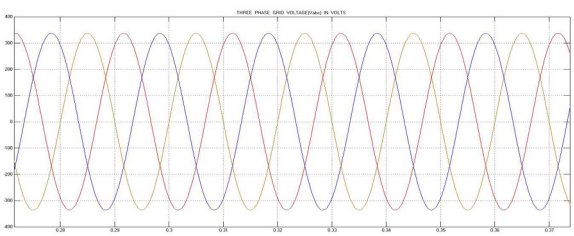

Fig.17. Three Phase Grid Voltage

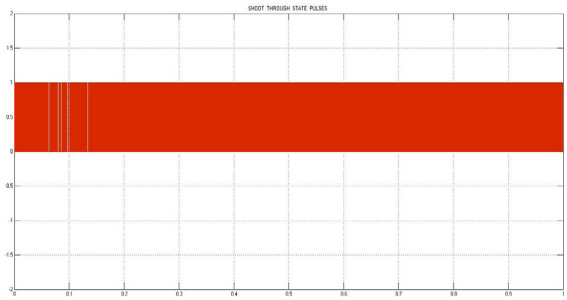

Fig.18. Shoot through Pulse

COMPARISION BETWEEN DC SOURCE & PV MODULE

S.No	Parameters	DC Source	PV Module
1	Input Voltage	130V	320V
2	Capacitor Voltage	760V	790V
3	Firing Angles	R-0^0 Y-120^0 B-240^0	R-60^0 Y-180^0 B-300^0
4	Grid Current	1.9A	1.9A

VIII. CONCLUSION

This paper presents detailed analysis on Z-source inverter control to study its transient behavior. For dc analysis, both small-signal and signal-flow-graph methods are used with an intention of developing a comprehensive guide on Z-source impedance modeling. A two-stage control method for the qZ-SI-based DG is implemented. The dynamic characteristics of the qZSI network have been investigated through small-signal analysis. The analysis is done using both shoot through mode and non shoot through mode for Z-Source and Quasi Z-Source separately. Based on the dynamic model, the two-stage control method for qZSI operating in both output voltage control and current control modes has been presented and the comparison between various parameters is shown.

REFERENCES

[1] Yuan Li, Shuai Jiang, Jorge G.Cintron Rivera, Fang Zheng Peng, " Modeling and control of Quasi Z-Source Inverter for Distributed Generation Application", IEEE TRANSACTIONS ON INDUSTRIAL ELECTRONICS, VOL. 60, NO. 4, pp. 1532-1541, APRIL 2013. | [2] F. Z. Peng, "Z-source inverter," IEEE Trans. Ind. Appl., vol. 39, no. 2, pp. 504–510, Mar./Apr. 2003. | [3] F. Z. Peng, M. Shen, and Z. Qian, "Maximum boost control of the Z-source inverter," IEEE Trans. Power Electron., vol. 20, no. 4, pp. 833–838, Jul./Aug. 2005. | [4] J. M. Carrasco, L. G. Franquelo, J. T. Bialasiewicz, E. Galvan, R. C. P. Guisado, M. A. M. Prats, J. I. Leon, and N. Moreno-Alfonso, "Power-electronic systems for the grid integration of renewable energy sources: A survey," IEEE Trans. Ind. Electron., vol. 53, no. 4, pp. 1002–1016, Aug. 2006. | [5] P. C. Loh, D. M. Vilathgamuwa, C. J. Gajanayake, Y. R. Lim, and C. W. Teo, "Transient modeling and analysis of pulse-width modulated Z-source inverter," IEEE Trans. Power Electron., vol. 22, no. 2, pp. 498–507, Mar. 2007. | [6] J. B. Liu, J. G. Hu, and L. Y. Xu, "Dynamic modeling and analysis of Z-source converter—Derivation of AC small signal model and design oriented analysis," IEEE Trans. Power Electron., vol. 22, no. 5, pp. 1786–1796, Sep. 2007. | [7] M. S. Shen, Q. S. Tang, and F. Z. Peng, "Modeling and controller design of the Z-source inverter with inductive load," in Proc. IEEE PESC, 2007,pp. 1804–1809. |