Research Paper Education

Performance Investigation of A Five Dimensional Coupling

Mr. P. B. Mali PG Student, Mechanical Department, RIT College, Islampur, India

Dr. S. S. Gawade Head of Mechanical Department, RIT College, Islampur, India

ABSTRACT

The Five Dimensional Couplings are designed to accommodate 5 degrees of shaft misalignment. This coupling allows easy adjustment to any possible misaligned shaft position without imposing heavy side loads on shafts, bearings or other machine equipment. Five Dimensional Couplings offer two parallel misalignments and three angular misalignments capabilities. The acting forces within the coupling can be precisely calculated, assuring a sound coupling design which is especially important for heavy-duty applications. If these shaft misalignments exceed the limit of the selected coupling capacity, excess side loads are introduced into the equipment which can cause vibrations, life reduction or failure of vital machine components such as bearings, motors, etc.

KEYWORDS Coupling, Degrees of Freedom, Input disc, Links, Motor.

INTRODUCTION:

A coupling is a device used to connect two shafts together at their ends for the purpose of transmitting power. The primary purpose of couplings is to join two pieces of rotating equipment while permitting some degree of misalignment or end movement or both.

In five dimensional coupling rotary motion can be transmitted between shafts with a considerable degree of displacement, using the coupling for displaced shafts. This coupling can be used for high speed and high torque applications. Inherently it is dynamically balanced. Angular velocities of the driving shaft are identically reproduced in the driven shaft and no phase shift is produced when the shaft displacement is changed.

The driven shaft is connected to the driver disk. Three eccentric, equally spaced pins extend from the face of the driver disk are used. The driven shaft has an identical disc and pin arrangement, but is parallely displaced from the driver shaft. A connecting or intermediate disk has three cylindrical pins that extend from each side face and have the same spacing as the pins on the driver and the driven disk as shown in figure 1.

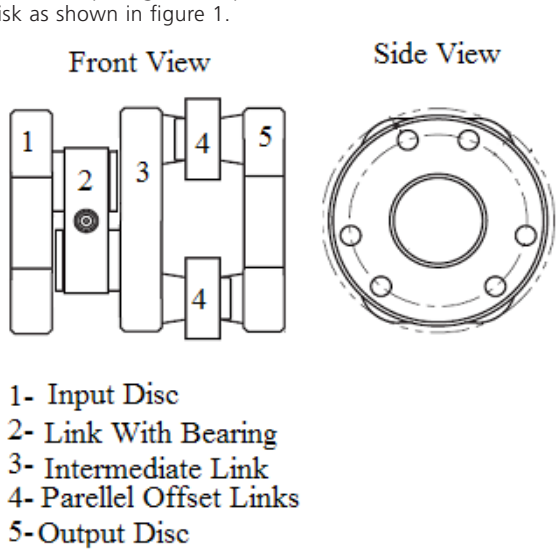

Figure 1: Five Dimensional Coupling

Since the intermediate disk is suspended by three pins located at the geometrically determined points, the center of the intermediate disk is also geometrically determined and cannot be moved unless the parallel shaft displacement becomes zero and the centerlines of the pins in the outer disk fall together. In this case the intermediate disk is free to swing about the centers of these pins. For practical applications, the zero displacement positions should be avoided. When varying the displacement of the shafts the intermediate disk automatically adjusts its position in compensation. The shafts can be displaced under load.

EXPERIMENTAL SET UP:

In Experimental set up as shown in figure 2, motor is used to give the power to the input shaft of the coupling through pulley and belt drive. Two bearing housings are provided to support the input and output shaft. At the end of the output shaft brake dynamometer is provided to measure the output torque. Tachometer is used to measure the output speed.

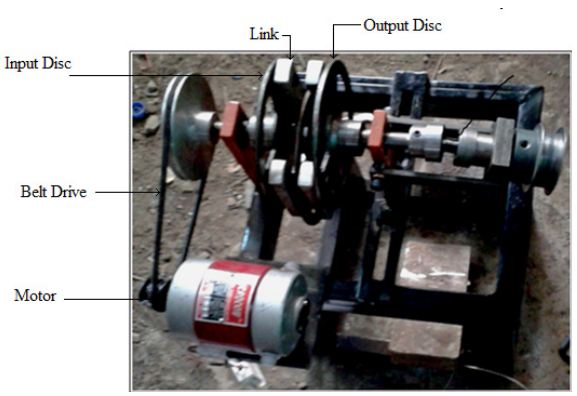

Figure 2: Experimental Setup

PERFORMANCE TESTING:

Testing of coupling has carried by using following Procedure:

1) First set the 10 mm parallel offset between two shafts.
2) Started the motor by turning electronic speed variation knob.
3) Let mechanism run & stabilized at certain speed (say 1300 rpm).
4) Place the pulley cord on Brake dynamometer pulley and added 100 gm weight into the pan, noted down the output speed for this load by means of tachometer.
5) Added another 100 gm weight into the pan and took the reading.

6) Five readings have taken for 500 gm.
7) Tabulated the readings in the observation table.
8) For second observation table parallel offset has increased up to 20 mm and repeated the procedure.
9) In this way, four observation tables have prepared for 40mm offset.
10) Finally, plotted the following performance characteristics curves:

a) Torque Vs Speed;
b) Power Vs Speed;
c) Efficiency vs. speed.

DISCUSSION ON EXPERIMENTAL RESULTS:

1) Torque vs. Speed:

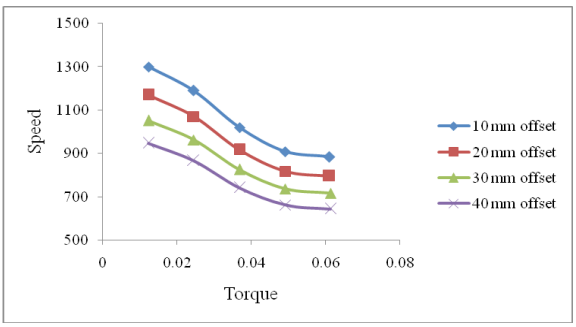

Graph 1: Torque vs. Speed

Characteristics Curves Torque vs. Speed have drawn for 10 mm offset, 20 mm offset, 30 mm offset and 40 mm offset. From graph it is observed that as offset increases, speed decreases for the same torque. For each offset, as torque increases, speed decreases slowly up to 0.02 N-m. Above 0.02 N-m speed decreases at faster rate. Again speed is constant beyond 0.05 N-m.

2) Power vs. Speed:

Characteristics Curves power vs. Speed have drawn for 10 mm offset, 20 mm offset, 30 mm offset and 40 mm offset. From graph it is observed that as offset increases, speed decreases for the same power. For each offset, as power increases, speed decreases slowly up to 2 watt. Above 2 watt, speed decreases at faster rate. Again speed is constant.

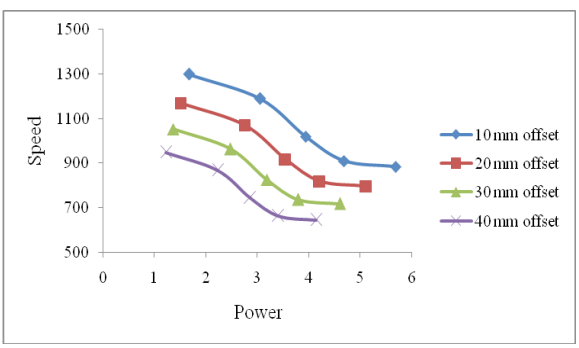

Graph 2: Power vs. Speed

Characteristics Curves power vs. Speed have drawn for 10 mm offset, 20 mm offset, 30 mm offset and 40 mm offset. From graph it is observed that as offset increases, speed decreases for the same power. For each offset, as power increases, speed decreases slowly up to 2 watt. Above 2 watt, speed decreases at faster rate. Again speed is constant.

3) Efficiency vs. Speed:

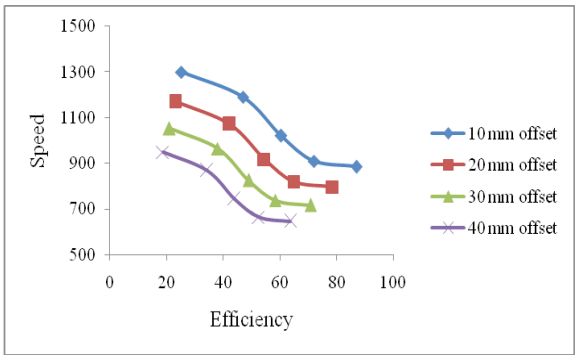

Graph 3: Efficiency vs. Speed

Characteristics Curves efficiency vs. speed have drawn for 10 mm offset, 20 mm offset, 30 mm offset and 40 mm offset. From graph it is observed that as offset increases, Efficiency decreases for the same speed. For each offset, as speed increases, efficiency decreases. From graph it is also observed that as speed increases, efficiency decreases.

CONCLUSION:

From this dissertation work it is conclude that the coupling efficiency is 87.00% at 10 mm offset. For the same speed, the efficiency decreases up to 64.00%. Therefore, at the higher offset efficiency decreases due to increased vibrations and increased centrifugal force.

Five dimensional Couplings are designed to accommodate five degrees of shaft misalignment. This coupling allows easy adjustment to any possible misaligned shaft position without imposing heavy side loads on shafts, bearings or other machine equipment. Five dimensional Couplings offer large shaft misalignment capabilities. The coupling provides a smooth flow of power for maximum product quality.

REFERENCES

1) Farzad Vesali et al., "Dynamics of universal joints, its failures and some propositions for practically improving its performance and life expectancy", Journal of Mechanical Science and Technology, 26 (8) (2012), p. 2439-2449. | 2) Siraj Sheikh, "Analysis of universal coupling under different torque condition", International journal of engineering science & advanced technology, Volume-2, Issue-3, 690 – 694. | 3) Lung Wen Tsai et al., "Evaluation of the Oldham Coupling-type balancer on a 900 V6 engine", SAE Technical paper series, Michigan, February 23-27, 1987. | 4) Joe Corcoran et al., "Advances in gas turbine couplings", Proceedings of the thirty-sixth turbo machinery symposium, 2007. | 5) Paolo Pennacchi et al., "Nonlinear effects caused by coupling misalignment in rotors equipped with journal bearings", Mechanical Systems and Signal Processing 30 (2012) 306–322. | 6) Redmond, "Study of a misaligned flexibly coupled shaft system having nonlinear bearings and cyclic coupling stiffness—Theoretical model and analysis", Journal of Sound and Vibration 329 (2010) 700–720. | 7) G. Pantazopoulos et al., "Torsional failure of a knuckle joint of a universal steel coupling system during operation – A case study", Engineering Failure Analysis 14 (2007) 73–84. | 8) Knut Grobmann et al., "Eccentric universal joints for parallel kinematic machine tools:variants and kinematic transformations", Production Engineering (2012) 6:521–529. | 9) X.F. Wang et al., "Kinematic investigation of tripod sliding universal joints based on co-ordinate transformation", Multi body System Dynamics. (2009) 22: 97–113. | 10) M. Li and L. Yu, "Analysis of the Coupled Lateral Torsional Vibration Of A Rotor-Bearing System with a Misaligned Gear Coupling", Journal of Sound and Vibration (2001) 243(2), 283}300. |